Data sheet
L-9518-0087-02-C

RENISHAW
apply innovation™

ASTRiA™ absolute inductive encoder system

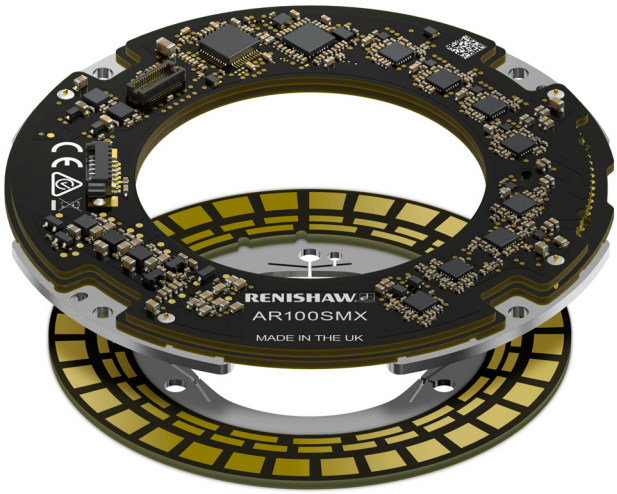

- **True-absolute non-contact inductive encoder system**
- **Immune to dirt, oils and high humidity**
- **High RF noise immunity**
- **Self-centring alignment flexures for quick and easy installation**
- **Integral set-up LED indicates signal level and aids alignment**
- **Steel mounting points enhance stability over wide temperature and speed ranges**
- **23 bit resolution**
- **±40 arc second (±0.194 mrad) accuracy**
- **Advanced signal processing, low Sub-Divisional Error (SDE), low jitter**
- **Low power consumption <100 mA**
- **Compact size: OD 100 mm, ID 40.7 mm, axial length 9.83 mm**

ASTRiA™ is a true-absolute inductive encoder, combining fit-and-forget robustness with high accuracy, easy installation and low power consumption.

Designed for use in extremely harsh environments, ASTRiA encoders use a multi-track inductive scanning principle that does not require line-of-sight between the stator and rotor. Contaminants like dirt, oils and humidity are invisible to the encoder.

The inductive scanning principle is combined with Renishaw's advanced signal processing to achieve high accuracy and enable 23 bit resolution.

The use of self-centring alignment features on the rotor, along with steel mounting points on the stator, combined with wide mounting tolerances and an integral signal level LED, mean installation is quick and easy.

Position information is taken from the full 360 degrees of scale, minimising eccentricity errors to help achieve accuracy of ±40 arc seconds (±0.194 mrad), with low SDE and jitter.

www.renishaw.com/astria-downloads

#renishaw

System features

High performance that's easy to achieve

- 23 bit resolution absolute encoder
- ±40 arc second (±0.194 mrad) accuracy
- Advanced signal processing, low SDE, low jitter
- Wide alignment tolerances (±0.25 mm axial alignment tolerance, ±0.2 mm radial alignment)
- Integral set-up LED indicates signal level

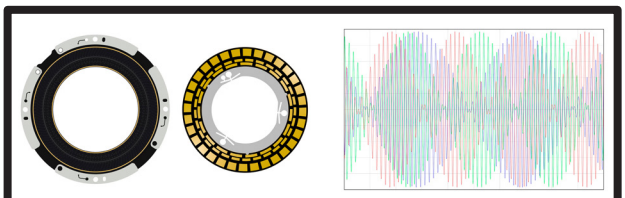

Unique triple track system

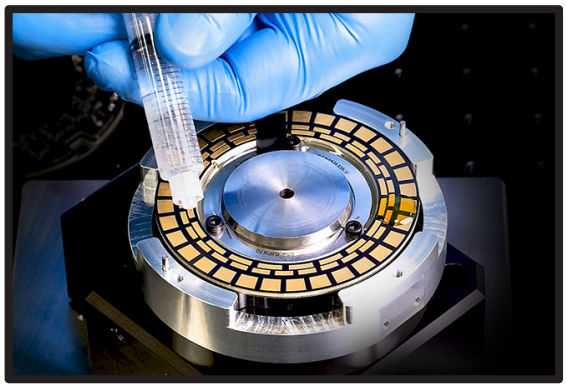

Designed for extremely harsh environments

- Inductive scanning technology reads through oil, dirt and humidity
- High RF noise immunity
- High shock and vibration resistance
- Non-contact system eliminates wear components

Self-centring rotor, steel mounting points on stator

- Rotor self-aligns for 'right first time' installation: no additional gauges or tools required
- Rotor and stator bolt in place, eliminating adhesives and simplifying assembly
- Steel mounting points on the rotor and stator enhance stability over wide temperature and speed ranges

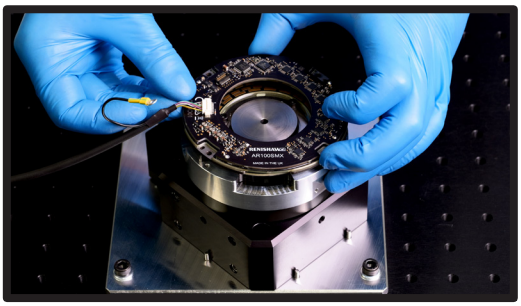

Multi-track inductive encoder technology

ASTRiA uses electromagnetic inductive scanning. The multi-track arrangement means that the active stator reads position information from the full 360 degrees of the passive rotor, thus compensating eccentricity.

The encoder comprises 1 × incremental track and 2 × vernier tracks. Combined with advanced interpolation, the result is 23 bit resolution and total accuracy of ±40 arc seconds (±0.194 mrad).

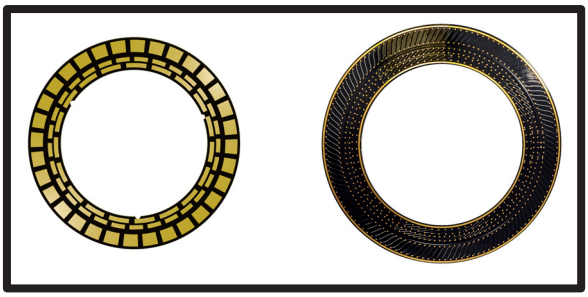

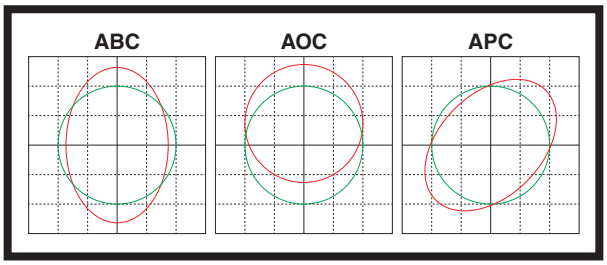

Advanced signal processing

The raw encoder signals are processed and conditioned to achieve optimum performance. ASTRiA features Renishaw's advanced signal conditioning. This includes Auto Balance Control (ABC), Auto Offset Control (AOC), and Auto Phase Control (APC) for optimised performance across a range of operating conditions, helping minimise Sub-Divisional Error (SDE) so users can benefit from improved velocity control.

This arrangement means there's no need for any calibration routines… just install the encoder and connect it to the controller.

Increased noise immunity

The ASTRiA encoder series comfortably exceeds the noise immunity requirements for CE certification, which helps prevent errors under harsh radio frequency interference (RFI) conditions.

IEC 61000-6-2 ✓

IEC 61000-6-4 ✓

General specifications

		ASTRiA AR100
Power supply		5 V ±10%, 100 mA maximum
Accuracy [1]		±40 arc seconds (±0.194 mrad)
Sub-Divisional Error		±16 arc seconds (±0.078 mrad)
Jitter (noise)		1 arc second RMS (±0.0048 mrad RMS)
Resolution		23 bits
Serial interface		BiSS C (unidirectional)
Maximum position update rate		32 kHz
Maximum BiSS C communications frequency		10 MHz
Temperature	Operating	–40 °C to +85 °C
Humidity		95% relative humidity (non-condensing) to IEC 60068-2-78
Sealing		IP00 (unhoused)
Vibration	Operating	Sinusoidal 300 m/s², 55 Hz to 2000 Hz, 3 axes
	Operating	Random vibration with ASD (Acceleration Spectral Density) of 0.025 g²/Hz between 20-150 Hz, 3 axes
Shock	Non-operating	1000 m/s², 6 ms, ½ sine, 3 axes
	Operating	300 m/s², 11 ms, ½ sine, 3 axes
Mass	Rotor and stator	< 95 g
EMC compliance		IEC 61000-6-2, 61000-6-4
Maximum external magnetic field during operation		100 mT
Cable		Detachable cable UL recognised component RoHS compatible High-flex shielded cable with 7 x 28 AWG cores 4.7 ±0.2 mm outside diameter
Diameter	Outer	100 mm
	Inside	40.7 mm
Axial length		9.83 mm [2]
Axial alignment tolerance	Working	±0.25 mm
	Optimum	±0.1 mm
Radial alignment tolerance	Working	±0.2 mm
	Optimum	±0.1 mm
Maximum speed	Operating	6000 rev/min

[1] When installed to the tolerances listed as optimum in this data sheet.

[2] The recommended clearance is 11 mm.

Installation principle

ASTRiA encoders are designed to make installation and alignment easier. One aspect is that the ASTRiA system is supplied factory calibrated **as a matched pair** to compensate for variability such as the thickness of PCB material.

This means that the alignment is set by the mounting surfaces, not the air gap between the rotor and stator. As long as the mounting surfaces achieve the required alignment tolerances, no further adjustment or calibration is required. The result is a faster, reliable installation that is easier to optimise. This also means that field replacement of the encoder is very simple, with no need for fine adjustment or the use of specialist tools.

Optimising installed accuracy

Installed error of an inductive rotary encoder with a 360 degree reading principle is a function of:

Error = scale error + reading errors + (rotor eccentricity x stator swash) + (rotor swash x stator eccentricity)

Encoder system errors — Installation errors

Rotor eccentricity

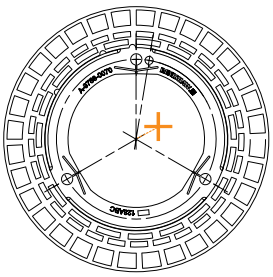

Radial offset between centre of rotor and centre of axis rotation

Stator swash

Stator is not perpendicular to the axis of rotation

Rotor swash

Rotor is not perpendicular to the axis of rotation

Stator eccentricity

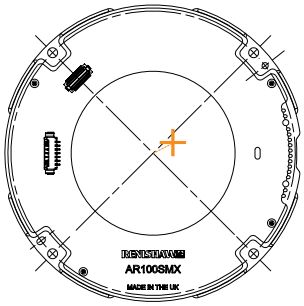

Radial offset between centre of stator and centre of axis rotation

Rotor alignment principle

During manufacture at Renishaw, the rotor's steel backing plate is mounted using the self-aligning flexures. The PCB with the scale tracks is placed onto the rotor's backing plate, then a precision alignment stage is used to centre the rotor's scale tracks to the centre of rotation, after which the PCB is rigidly bonded to the steel backing plate. This ensures two things:

1. When the rotor is installed using the self-aligning flexures, the scale tracks will be aligned to the centre of rotation, thus minimising eccentricity error.
2. The rotor's steel backing plate ensures that the PCB and scale tracks are screwed parallel to the shaft's mounting surface, thus minimising swash error.

A dowel hole in the rotor's steel backing plate is provided as a poka-yoke feature to provide correct orientation of the rotor's zero point.

Stator alignment principle

The stator has 4 steel mounting points. Two of the mounting points have a location for a dowel to aid alignment. The stator coils are precisely aligned during manufacture to the mounting points so good alignment can be achieved by using the dowel mounting points.

If a poka-yoke feature is required for correct orientation of the stator's zero point, there is a notch in one side of the PCB that can be used.

Overall dimensions

Dimensions in mm

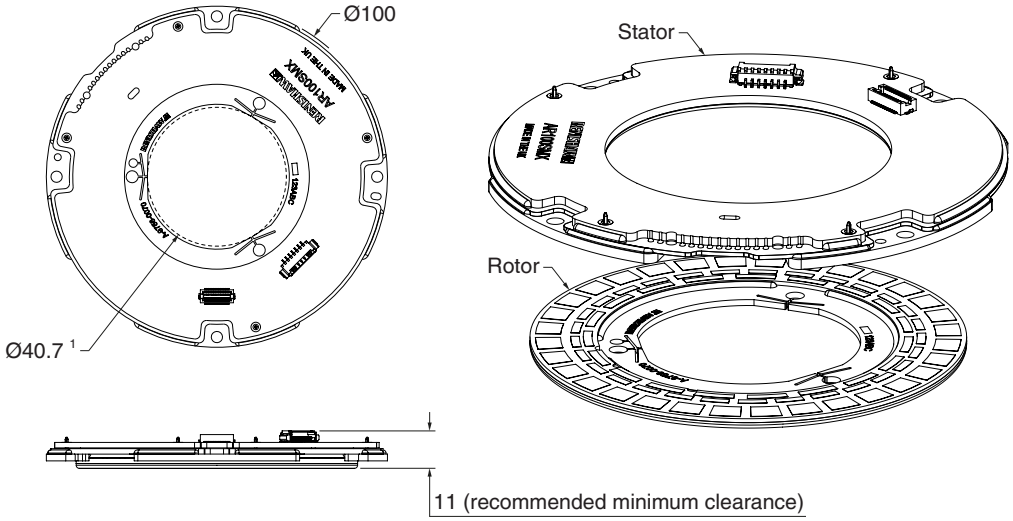

Screw and alignment pin locations

Rotor sub-assembly

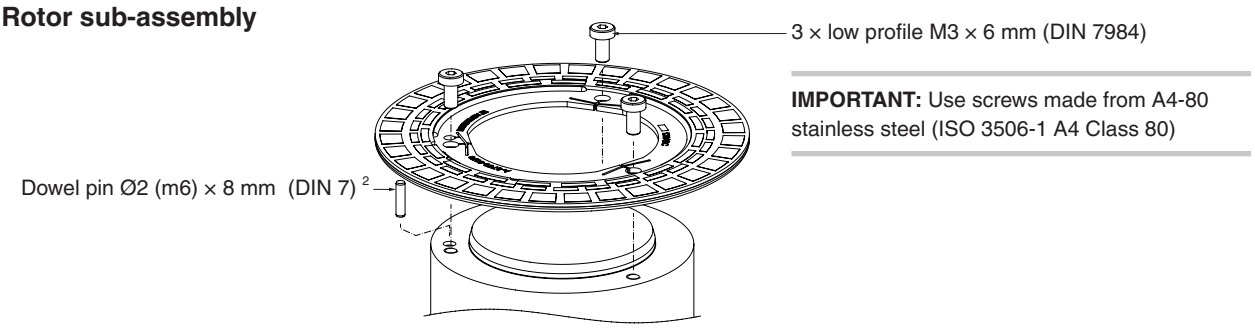

Stator sub-assembly

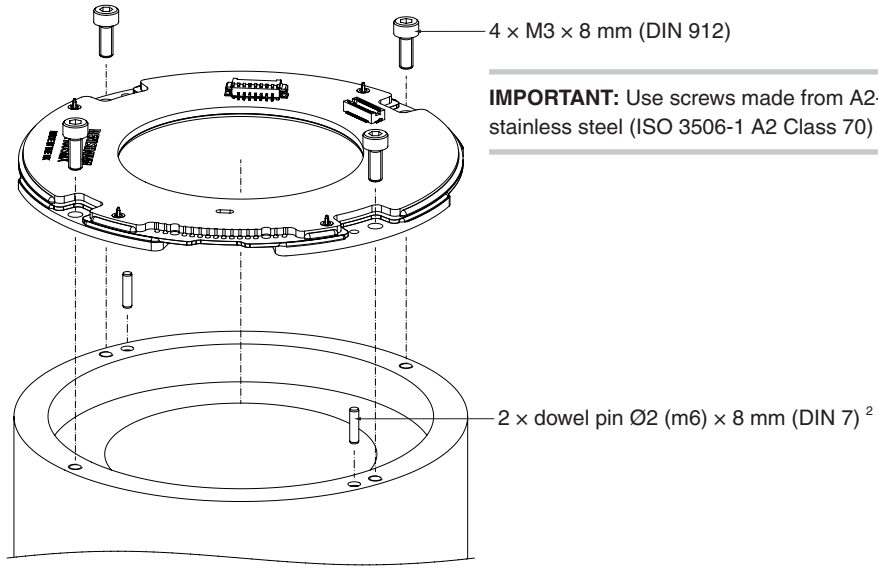

[1] Deflects to fit Ø41 shaft.

[2] Retaining compound recommended to fix dowel pin in hole, e.g. Loctite® 638.

Detail rotor dimensions

Dimensions and tolerances in mm

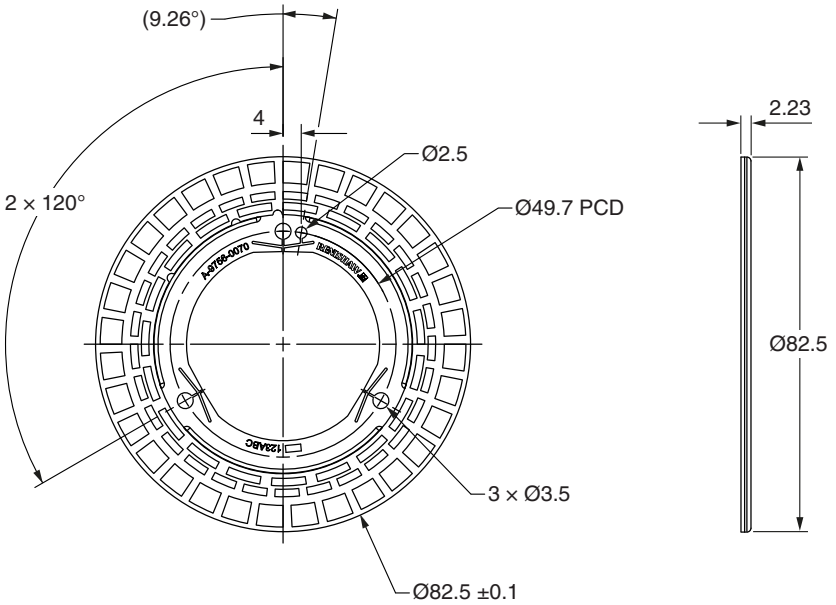

Suggested rotor bracket dimensions

Dimensions and tolerances in mm

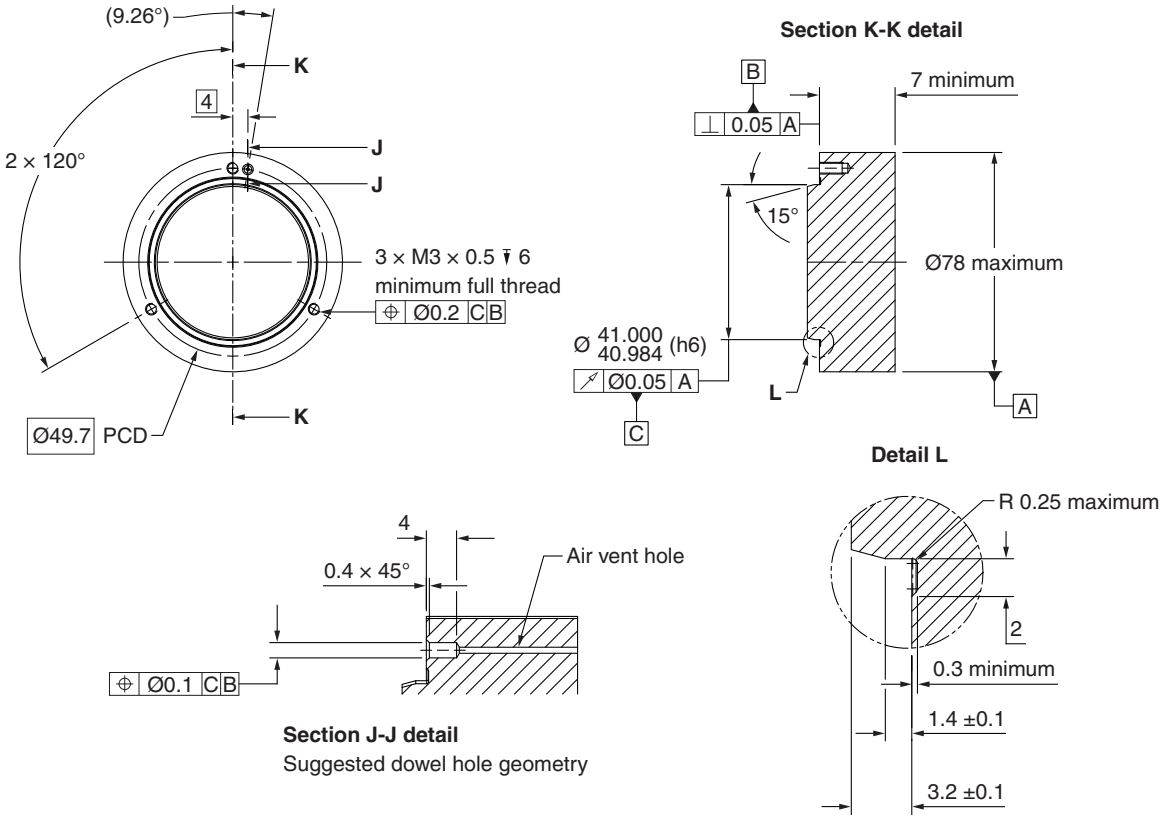

NOTE: The 15° chamfer is required to ensure the safe fitment of the rotor onto the shaft.

Detail stator dimensions

Dimensions and tolerances in mm

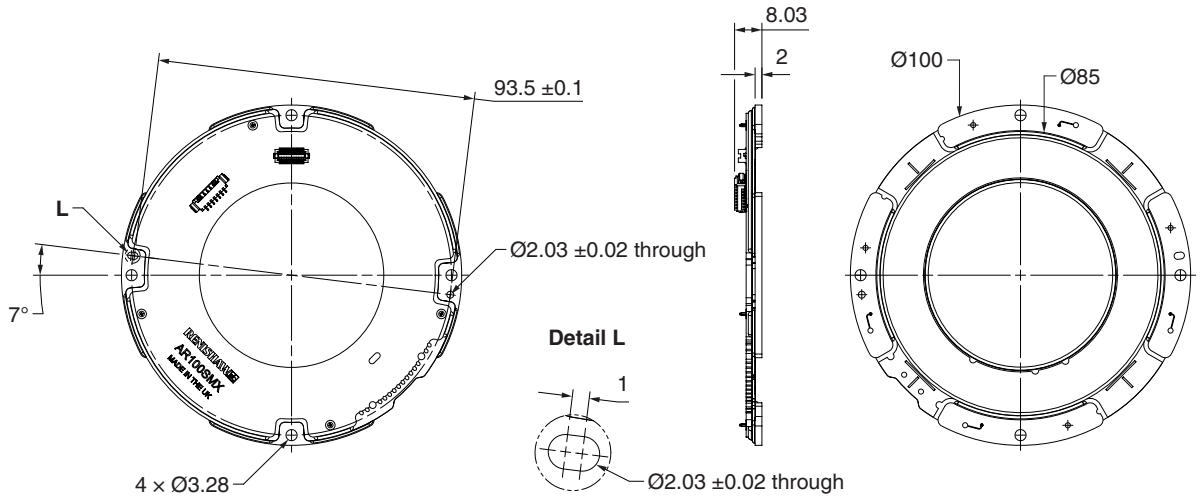

Suggested stator bracket dimensions

Dimensions and tolerances in mm

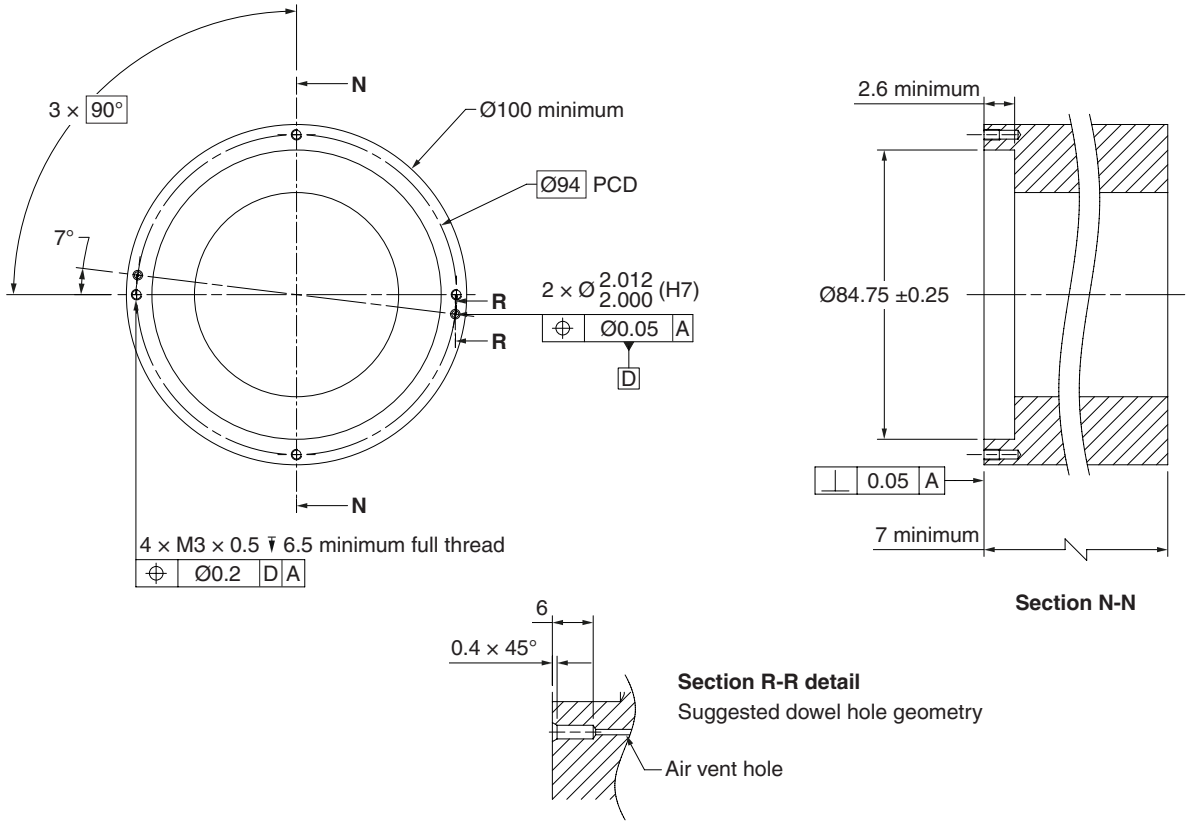

NOTE: Customer earth connection via stator metal mounting plates.

Overall system dimensions

Dimensions and tolerances in mm

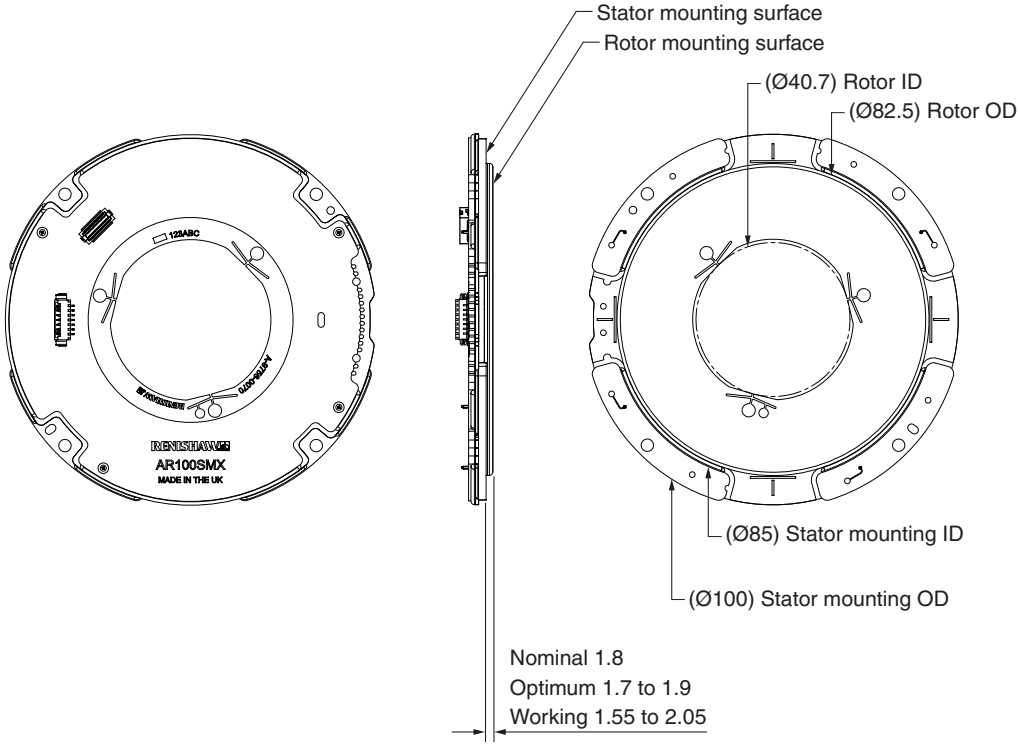

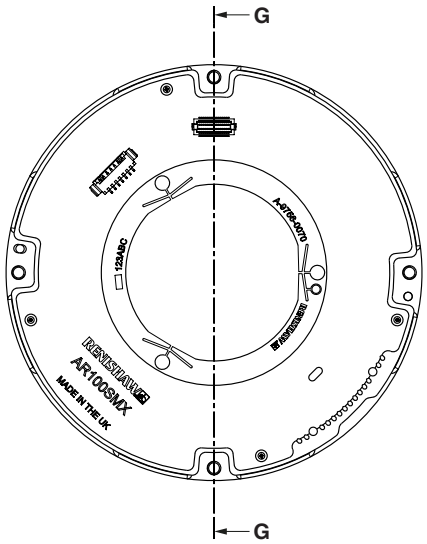

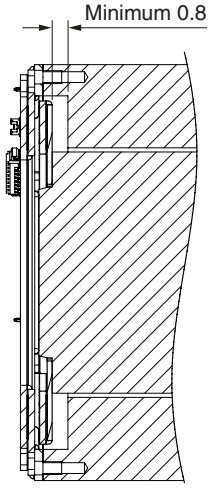

Section G-G

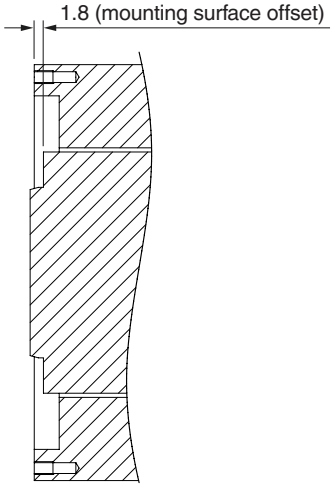

Section G-G
Customer brackets only

ASTRiA encoder part numbers

A R 100 S M X 23 B0 00 S AA 00

Product
A = ASTRiA

Scale form
R = Rotary

System outside diameter
100 = 100 mm

Series
S = Standard

Connector option
M = Molex (standard) connector

Functional Safety
X = Standard (not FS certified)

Single-turn resolution
23 = 23 bits

Serial interface
B0 = BiSS C (unidirectional)

Multi-turn resolution
00 = Single-turn

Type
S = Single-turn absolute

Rotor option
AA = Axial screw mounted, with self-alignment

Additional features
00 = Standard

www.renishaw.com/contact

#renishaw

+44 (0) 1453 524524 uk@renishaw.com

© 2025-2026 Renishaw plc. All rights reserved. This document may not be copied or reproduced in whole or in part, or transferred to any other media or language by any means, without the prior written permission of Renishaw.
RENISHAW® and the probe symbol are registered trade marks of Renishaw plc. Renishaw product names, designations and the mark 'apply innovation' are trade marks of Renishaw plc or its subsidiaries. BiSS® is a registered trade mark of iC-Haus GmbH. Other brand, product or company names are trade marks of their respective owners.
WHILE CONSIDERABLE EFFORT WAS MADE TO VERIFY THE ACCURACY OF THIS DOCUMENT AT PUBLICATION, ALL WARRANTIES, CONDITIONS, REPRESENTATIONS AND LIABILITY, HOWSOEVER ARISING, ARE EXCLUDED TO THE EXTENT PERMITTED BY LAW. RENISHAW RESERVES THE RIGHT TO MAKE CHANGES TO THIS DOCUMENT AND TO THE EQUIPMENT, AND/OR SOFTWARE AND THE SPECIFICATION DESCRIBED HEREIN WITHOUT OBLIGATION TO PROVIDE NOTICE OF SUCH CHANGES.
Renishaw plc. Registered in England and Wales. Company no: 1106260. Registered office: New Mills, Wotton-under-Edge, Glos, GL12 8JR, UK.

Part no.: L-9518-0087-02-C
Issued: 10.2026