Installation guide
M-6195-9232-03-D

RENISHAW
apply innovation™

VIONiC™ RSLM20/RELM20 high accuracy linear encoder system

Contents

Legal notices

Copyright

Trade marks

RENISHAW® and the probe symbol are registered trade marks of Renishaw plc. Renishaw product names, designations and the mark 'apply innovation' are trade marks of Renishaw plc or its subsidiaries. Other brand, product or company names are trade marks of their respective owners.

Patents

Features of Renishaw's encoder systems and similar products are the subjects of the following patents and patent applications:

EP1173731	IL146001	JP4750998	US6775008	CN10054342
EP1766334	JP4932706	US7659992	CN100507454	JP5386081
US7550710	CN101300463	EP1946048	JP5017275	US7624513
CN101310165	EP1957943	US7839296	CN1314511	EP1469969
JP5002559	US8987633	US8466943		

Disclaimer

WHILE CONSIDERABLE EFFORT WAS MADE TO VERIFY THE ACCURACY OF THIS DOCUMENT AT PUBLICATION, ALL WARRANTIES, CONDITIONS, REPRESENTATIONS AND LIABILITY, HOWSOEVER ARISING, ARE EXCLUDED TO THE EXTENT PERMITTED BY LAW.

RENISHAW RESERVES THE RIGHT TO MAKE CHANGES TO THIS DOCUMENT AND TO THE EQUIPMENT, AND/OR SOFTWARE AND THE SPECIFICATION DESCRIBED HEREIN WITHOUT OBLIGATION TO PROVIDE NOTICE OF SUCH CHANGES.

Terms and Conditions and Warranty

Unless you and Renishaw have agreed and signed a separate written agreement, the equipment and/or software are sold subject to the Renishaw Standard Terms and Conditions supplied with such equipment and/or software, or available on request from your local Renishaw office.

Renishaw warrants its equipment and software for a limited period (as set out in the Standard Terms and Conditions), provided that they are installed and used exactly as defined in associated Renishaw documentation. You should consult these Standard Terms and Conditions to find out the full details of your warranty.

Equipment and/or software purchased by you from a third-party supplier is subject to separate terms and conditions supplied with such equipment and/or software. You should contact your third-party supplier for details.

Product compliance

Renishaw plc declares that the VIONiC™ encoder system complies with the applicable standards and regulations. A copy of the EU declaration of conformity is available from our website at **www.renishaw.com/productcompliance**

Compliance

This device complies with part 15 of the FCC Rules. Operation is subject to the following two conditions:

(1) This device may not cause harmful interference, and (2) this device must accept any interference received, including interference that may cause undesired operation.

The user is cautioned that any changes or modifications not expressly approved by Renishaw plc or authorised representative could void the user's authority to operate the equipment.

This equipment has been tested and found to comply with the limits for a Class A digital device, pursuant to part 15 of the FCC Rules. These limits are designed to provide reasonable protection against harmful interference when the equipment is operated in a commercial environment. This equipment generates, uses, and can radiate radio frequency energy and, if not installed and used in accordance with the instruction manual, may cause harmful interference to radio communications. Operation of this equipment in a residential area is likely to cause harmful interference in which case the user will be required to correct the interference at his own expense.

NOTE: This unit was tested with shielded cables on the peripheral devices. Shielded cables must be used with the unit to ensure compliance.

Further information

Further information relating to the VIONiC encoder range can be found in the *VIONiC series encoder system* data sheet (Renishaw part no. L-9517-9678), *Advanced Diagnostic Tool ADTi-100* data sheet (Renishaw part no. L-9517-9699), *Advanced Diagnostic Tool ADTi-100 and ADT View software* quick-start guide (Renishaw part no. M-6195-9321), and the *Advanced Diagnostic Tool ADTi-100 and ADT View software* user guide (Renishaw part no. M-6195-9413). These can be downloaded from our website **www.renishaw.com/vionicdownloads** and are also available from your local Renishaw representative.

Legal notices (continued)

Packaging

The packaging of our products contains the following materials and can be recycled.

Packaging Component	Material	ISO 11469	Recycling Guidance
Outer box	Cardboard	Not applicable	Recyclable
	Polypropylene	PP	Recyclable
Inserts	Low density polyethylene foam	LDPE	Recyclable
	Cardboard	Not applicable	Recyclable
Bags	High density polyethylene bag	HDPE	Recyclable
	Metalised polyethylene	PE	Recyclable

REACH regulation

Information required by Article 33(1) of Regulation (EC) No. 1907/2006 (“REACH”) relating to products containing substances of very high concern (SVHCs) is available at **www.renishaw.com/REACH**

WEEE recycling guidelines

The use of this symbol on Renishaw products and/or accompanying documentation indicates that the product should not be mixed with general household waste upon disposal. It is the responsibility of the end user to dispose of this product at a designated collection point for waste electrical and electronic equipment (WEEE) to enable reuse or recycling. Correct disposal of this product will help to save valuable resources and prevent potential negative effects on the environment. For more information, please contact your local waste disposal service or Renishaw distributor.

Storage and handling

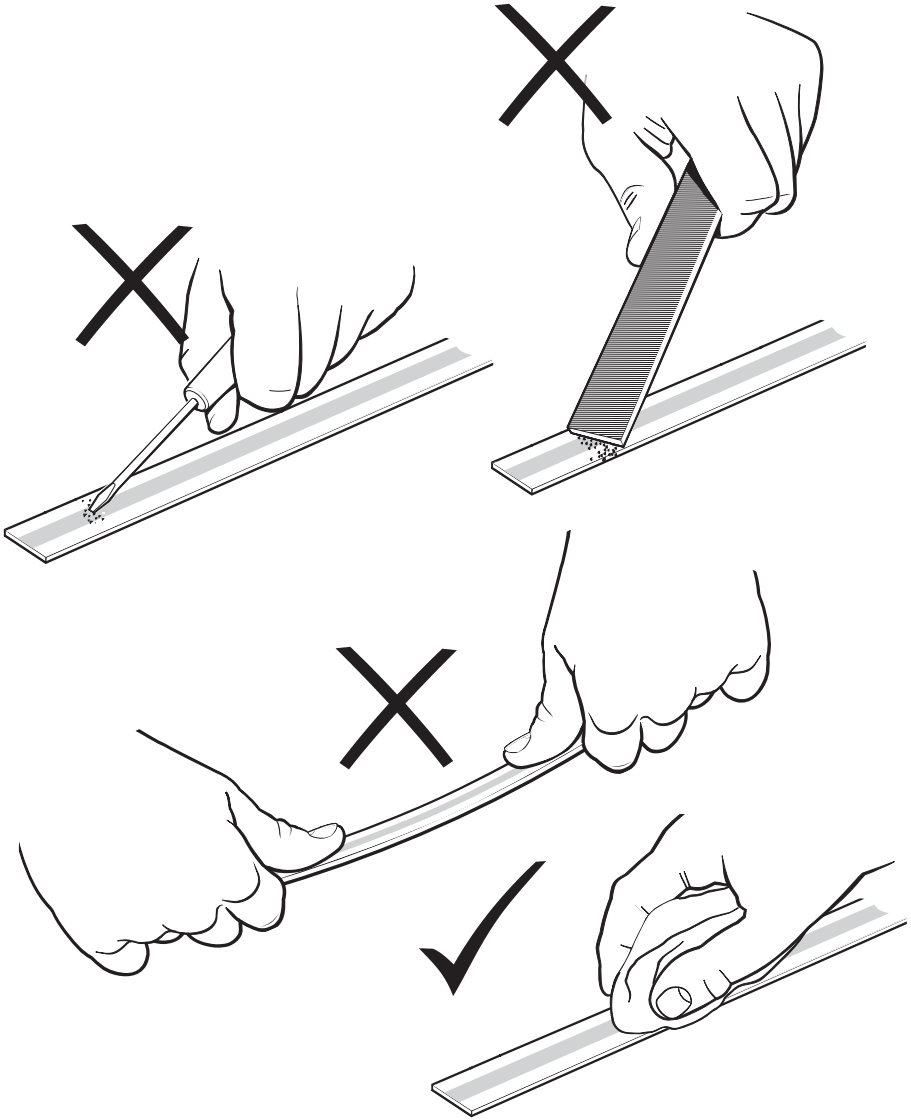

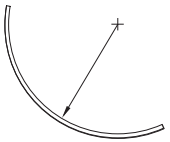

Minimum bend radius
RSLM20 – 250 mm
RELM20 – DO NOT BEND

NOTE: Ensure self-adhesive tape is on the outside of the bend.

Scale and readhead

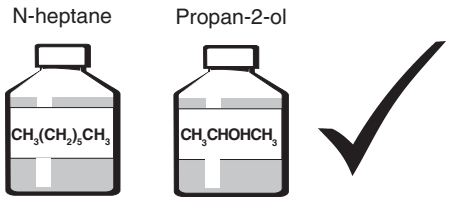

Readhead only

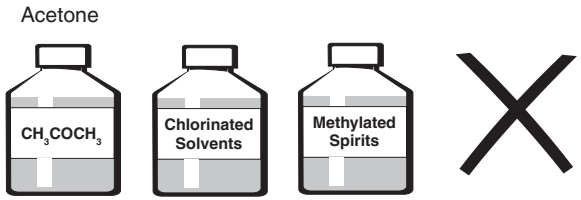

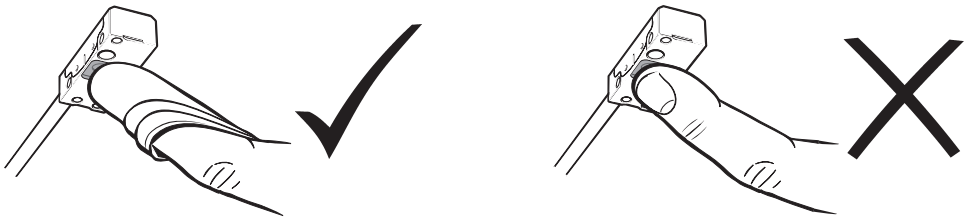

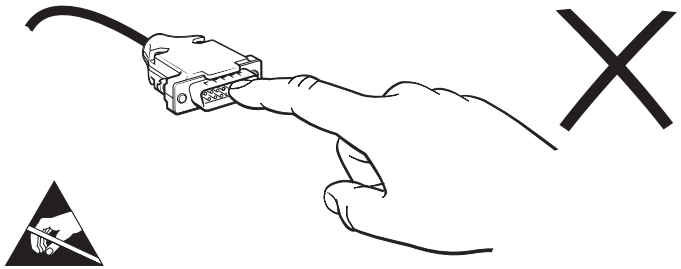

Storage

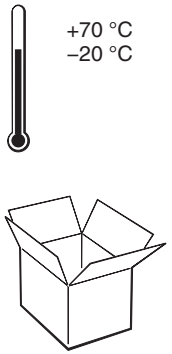

Operating

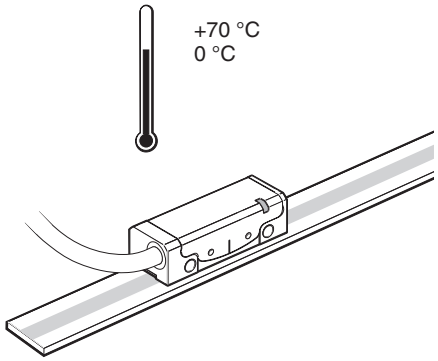

Humidity

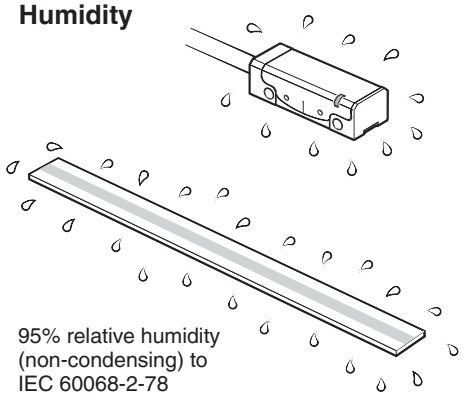

95% relative humidity (non-condensing) to IEC 60068-2-78

VIONiC readhead installation drawing

Dimensions and tolerances in mm

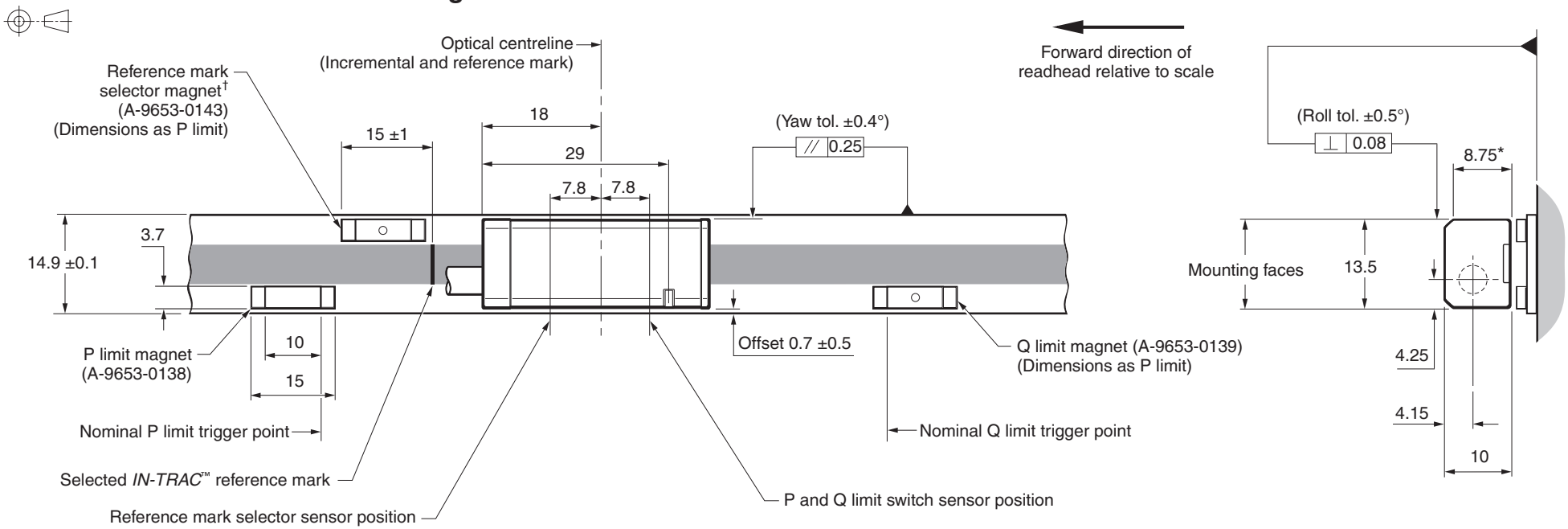

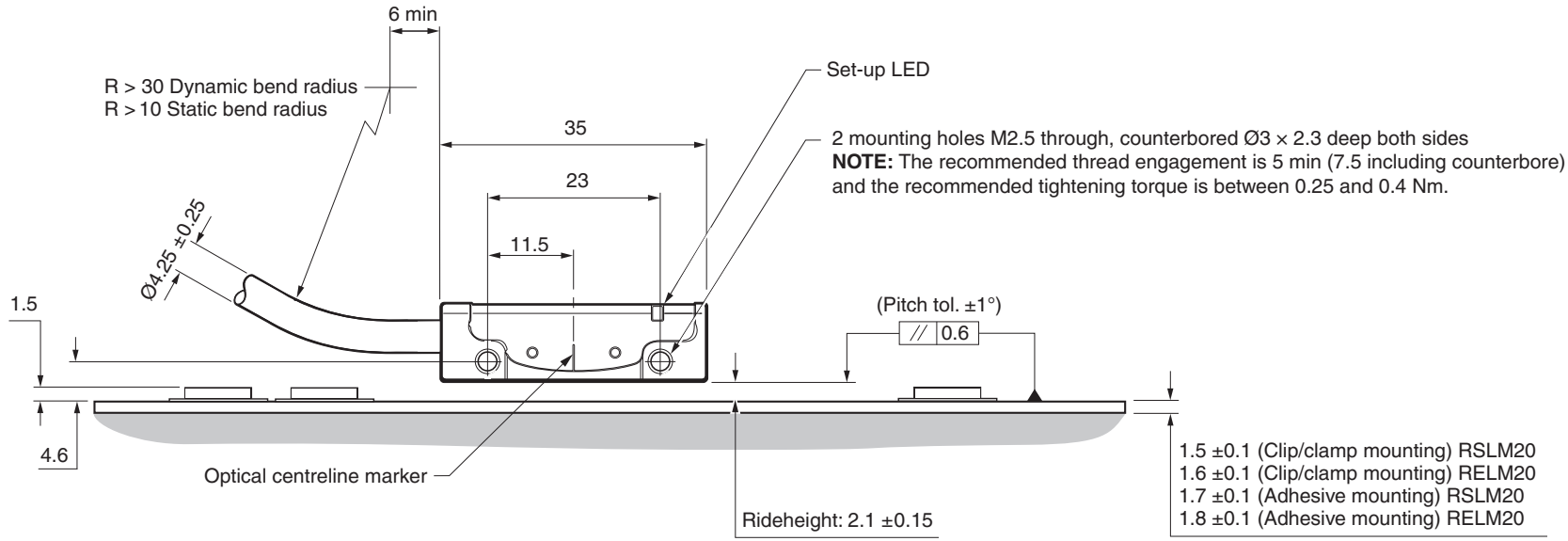

*Extent of mounting face. †Reference mark selector is only required with RSLC20 scale.

NOTES: The reference mark selector and limit actuator locations are correct for the readhead orientation shown.
External magnetic fields greater than 6 mT, in the vicinity of the readhead, may cause false activation of the limit and reference sensors.

Measuring lengths

Dimensions and tolerances in mm

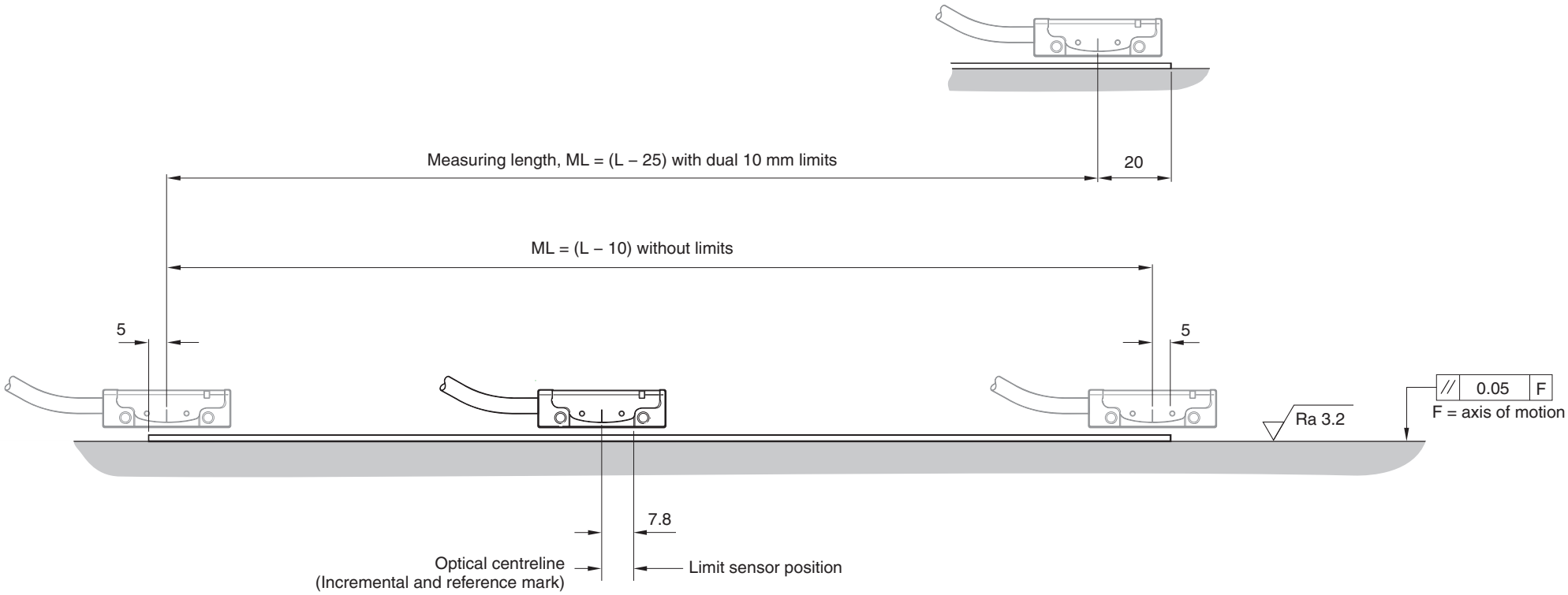

Adhesive mounting installation drawing

Dimensions and tolerances in mm

RSLM20
(Centre reference mark)

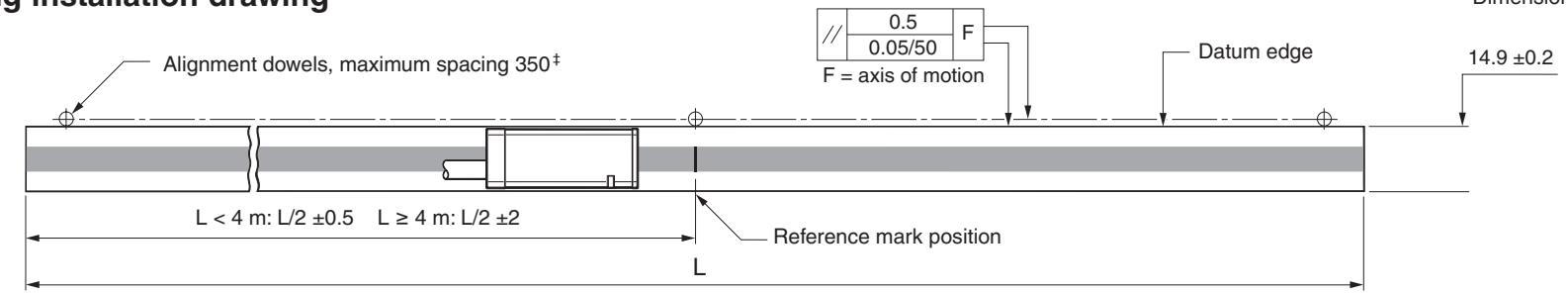

RSLE20
(End reference mark)

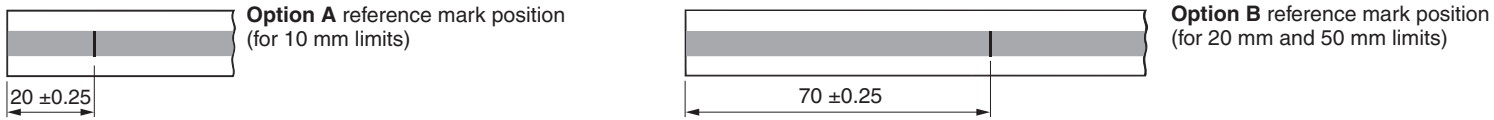

RSLC20
(Customer selected reference mark)

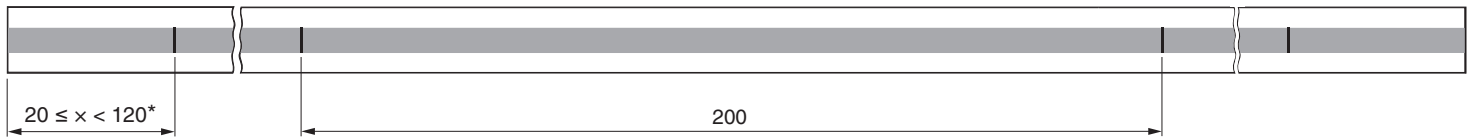

RELM20
(Centre reference mark)

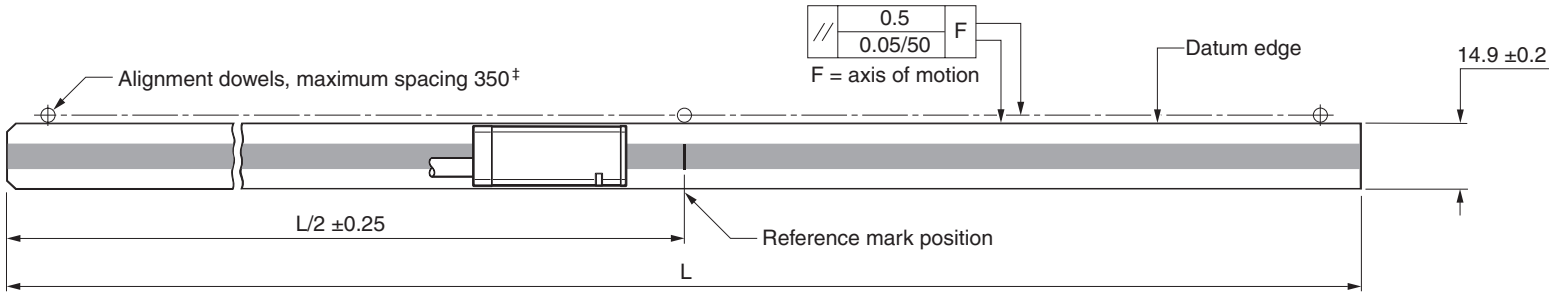

RELE20
(End reference mark)

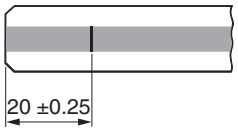

Adhesive datum clamp
Clamping in this way ensures scale positional stability relative to substrate.

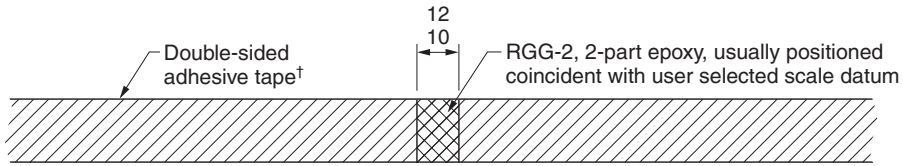

NOTES:

- Adhesive mounted scale should not be re-used after installation.
- For readhead dimensions see 'VIONiC readhead installation drawing', page 4.
- When installing in a groove allow a tolerance for scale width.
- See 'Measuring lengths', page 5, for information on using limits.

* Reference marks positioned equidistant from scale ends.
† Double-sided adhesive tape is included with all scale lengths.
‡ When scale is to be mounted horizontally on a vertical surface, position the dowels so that the datum edge is supported.

Adhesive mounting installation

1. Thoroughly clean and degrease the substrate with a lint-free cloth.

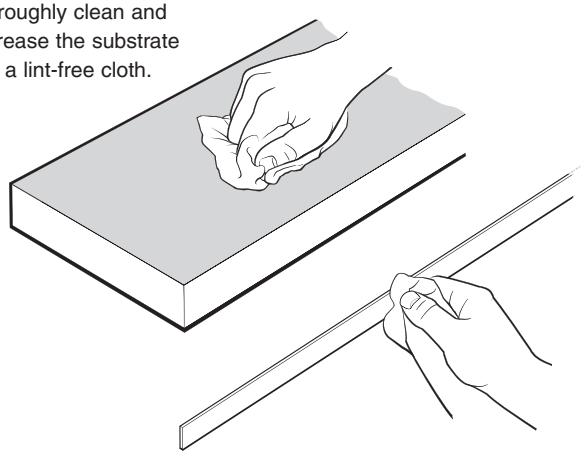

Clean underside of scale using approved solvents ('Storage and handling', page 3).

2. Mark area for epoxy on adhesive tape.

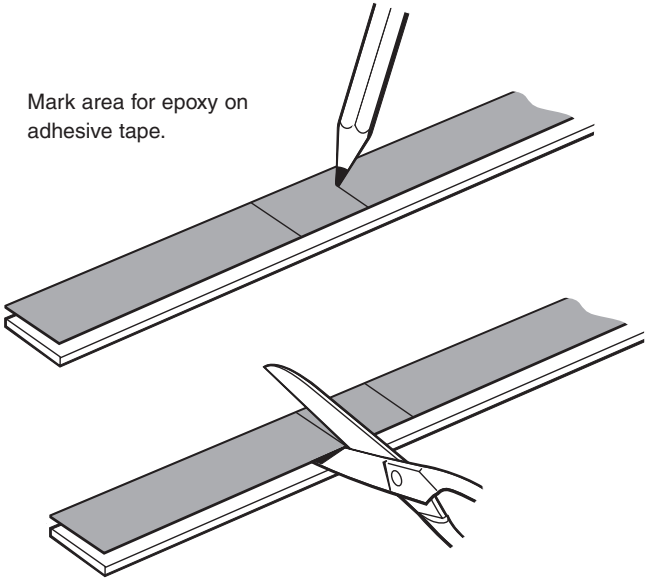

3. Remove backing liner from one side and stick to underside of scale.

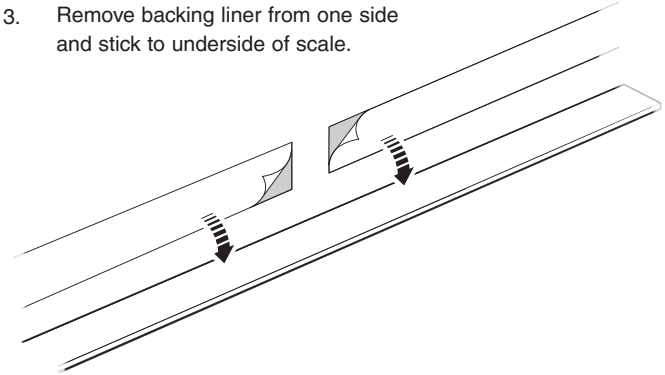

4. Thoroughly mix and apply epoxy then remove remaining backing liner.

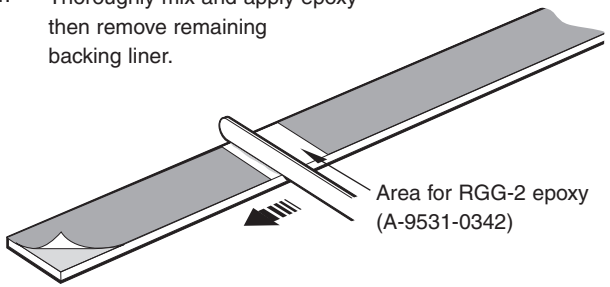

5. Locate scale against dowels or ledge and rotate down onto substrate. Press down with firm finger pressure.

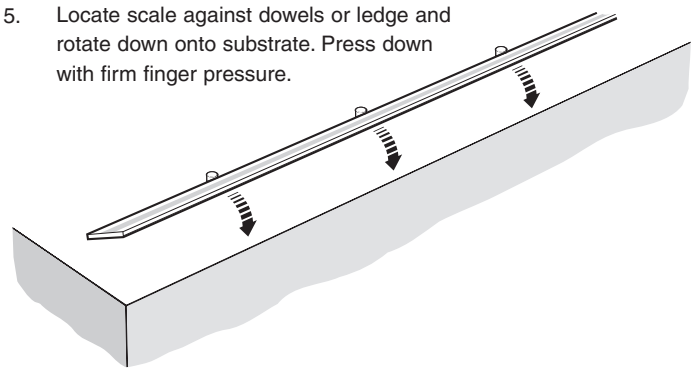

6. Support dowels

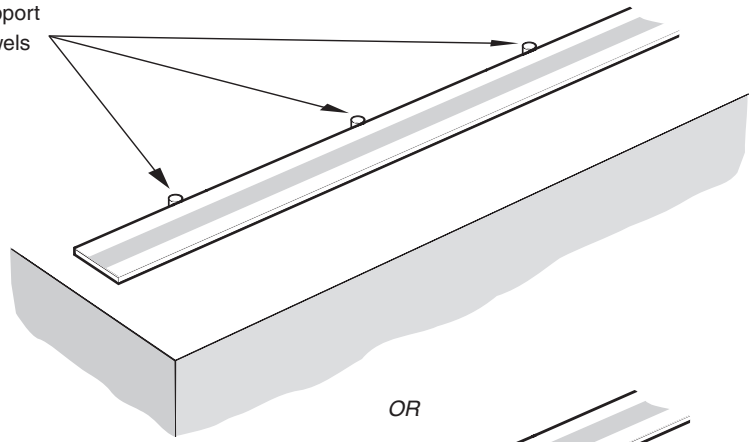

OR

Mounting ledge

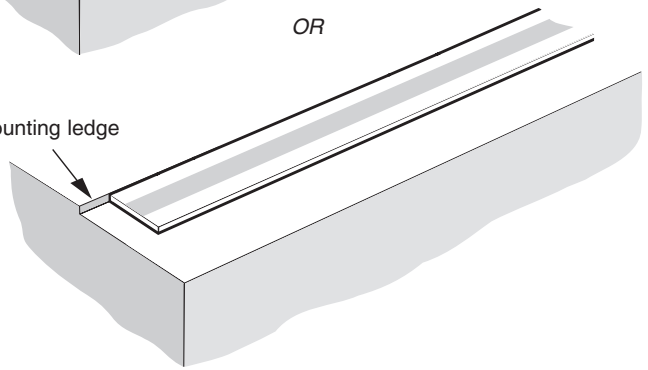

7.

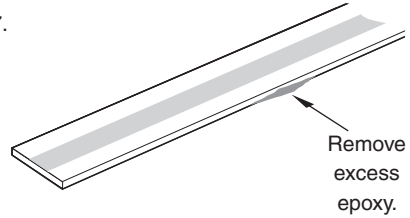

8.

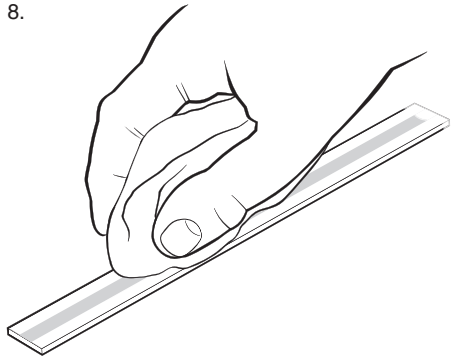

Allow 24 hours for epoxy to cure fully, then clean scale using Renishaw scale wipes (A-9523-4040) or a clean, dry, lint-free cloth.

Clip/clamp mounting installation drawing

Dimensions and tolerances in mm

Datum clamp
(A-9584-2050)

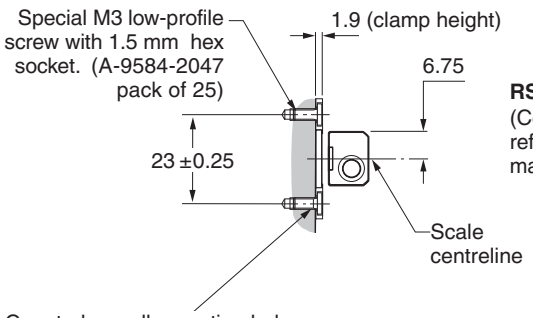

Counterbore all mounting holes
3.2 mm diameter
1 mm to 1.5 mm deep 6 mm
minimum depth full thread

Mounting clip
(A-9584-2049)

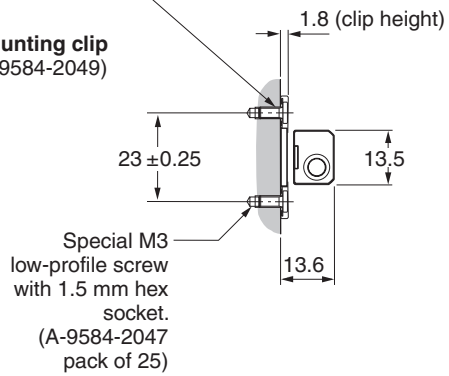

RSLM20
(Centre reference mark)

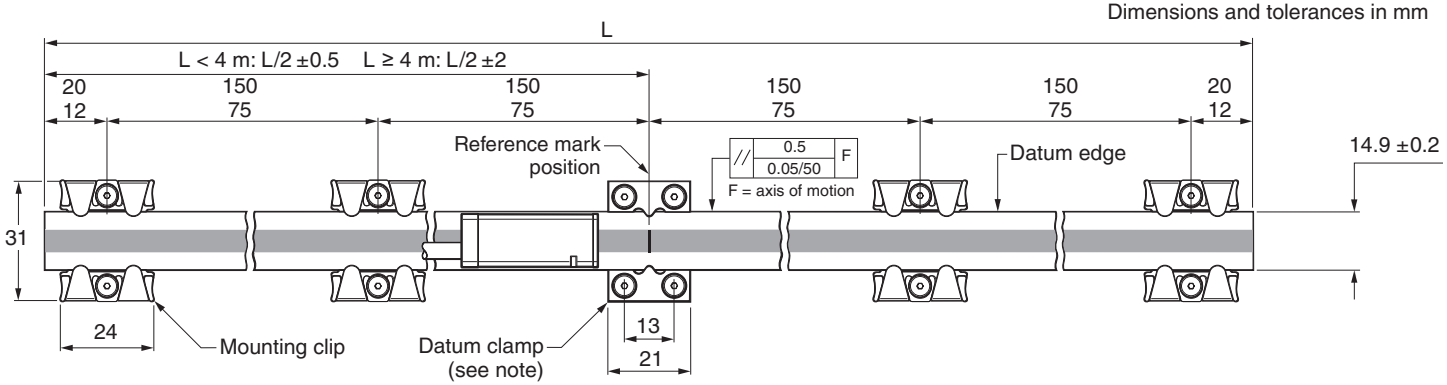

RSLE20
(End reference mark)

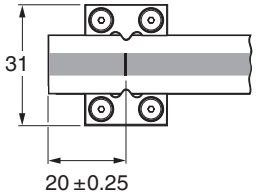

Option A
Reference mark position
(for 10 mm limits)

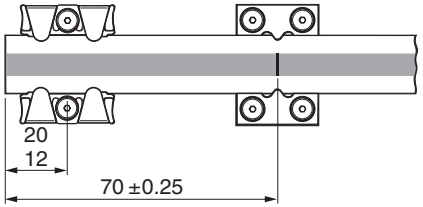

Option B
Reference mark position
(for 20 mm and 50 mm limits)

RSLC20*
(Customer selected reference mark)

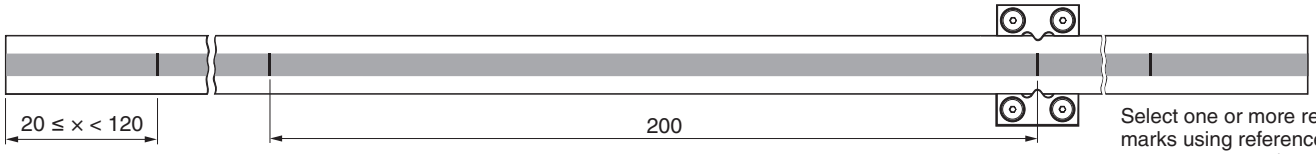

Select one or more reference marks using reference mark selector magnet (A-9653-0143)

RELM20
(Centre reference mark)

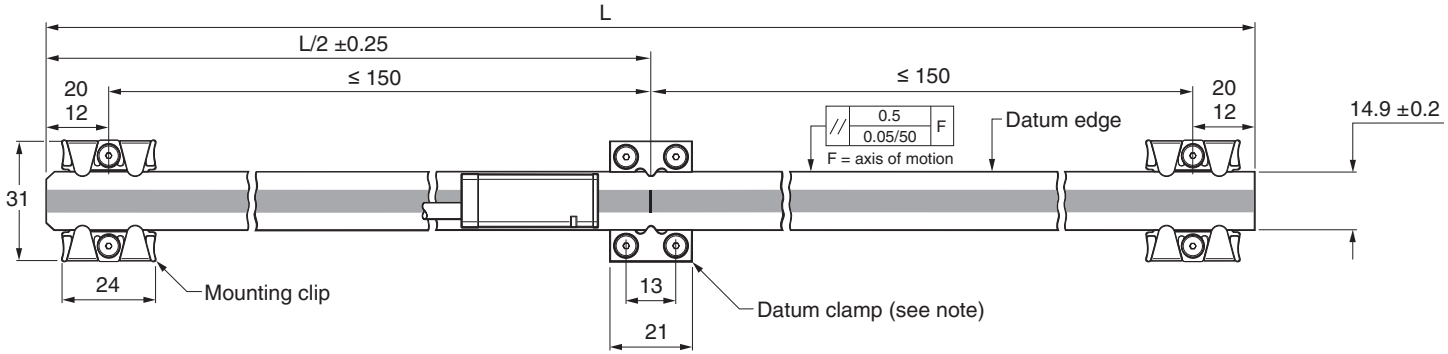

RELE20
(End reference mark)

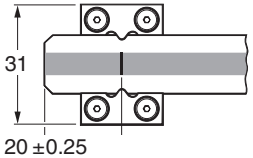

NOTES:

- Datum clamp usually coincident with selected *IN-TRAC* reference mark. However the position is user-selectable depending upon application.
- For lengths 80 ≤ L ≤ 190 ensure scale is clamped or clipped in the middle as well as at both ends.
- For optimum performance the readhead should be installed close to nominal geometry.
- Care should be taken to ensure sufficient clearance between the readhead/mounting bracket and clips/datum clamp.
- Only special low-profile screws should be used. Screws are provided with all clips/datum clamps and spares can be supplied if required.

*Clips omitted for clarity. Reference marks positioned equidistant from scale ends.

Clip/clamp mounting installation

1. Thoroughly clean and degrease the substrate with a lint-free cloth.

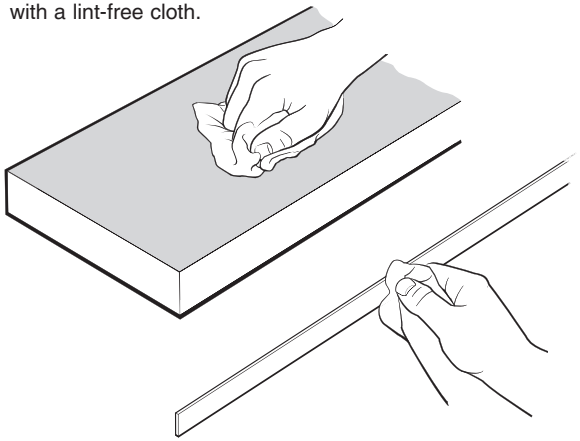

Clean the underside of scale using approved solvents (‘Storage and handling’, page 3).

2. Fit clips on one side of the scale and align to the specification given in the installation drawing. Only the special low-profile screws supplied with the clips should be used. Additional screws can be purchased from Renishaw (A-9584-2047 pack of 25).
NOTE: When mounting scale to vertical surfaces, temporary bridge clamps (A-9584-2112) are available which support the scale prior to fitting clips.

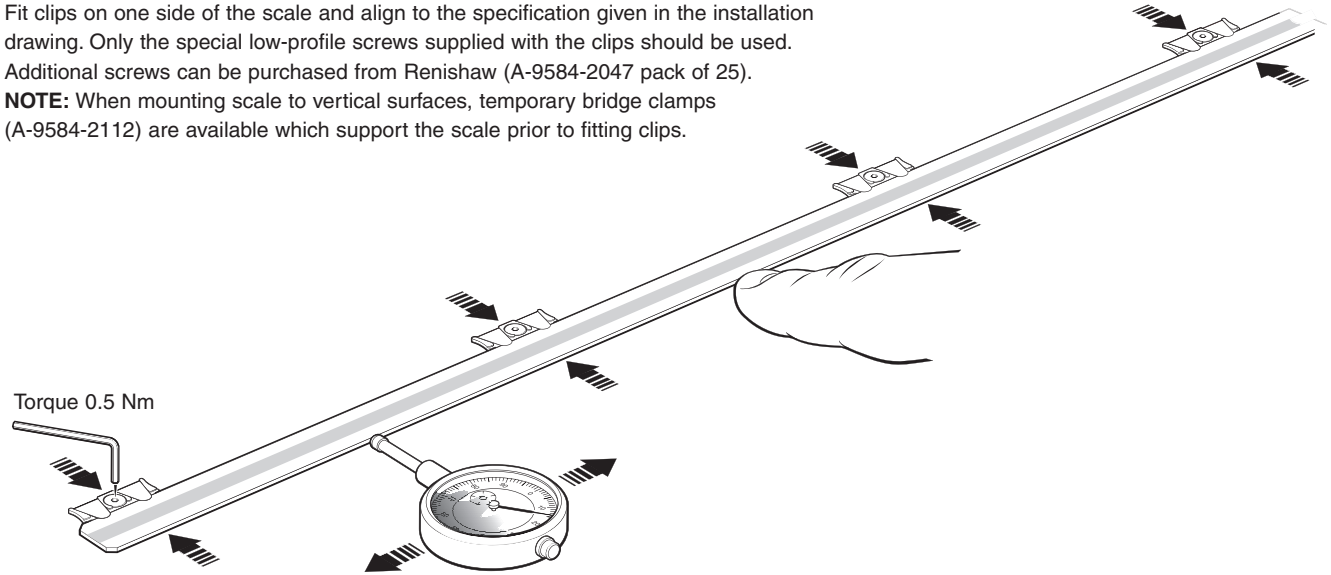

3. Fit the remaining clips using clip setting shim M-9584-0928 (provided with A-9584-2050 clamp set).

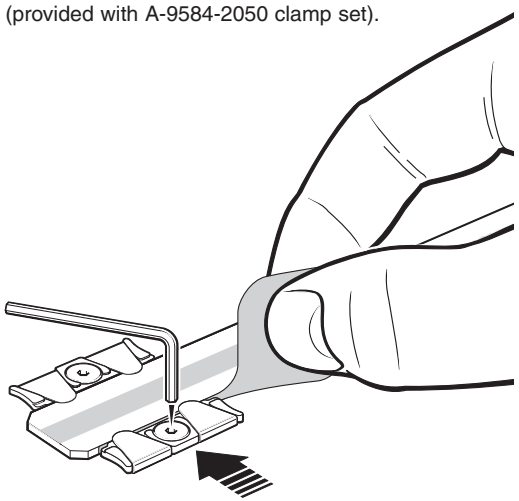

4. Place datum clamps against the scale and secure using the special M3 low-profile screws supplied.

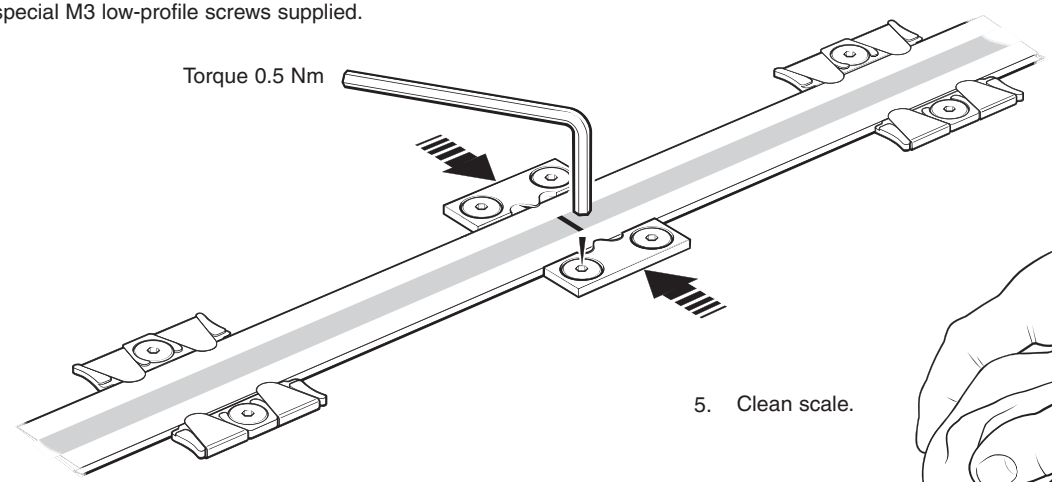

5. Clean scale.

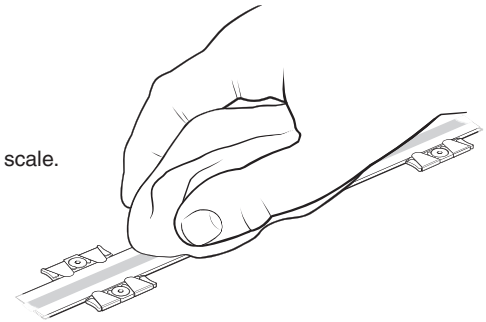

Reference mark selector and limit magnet installation

For accuracy and ease of positioning of reference mark selector and limit magnets, the applicator tool (A-9653-0201) should be used. The magnet should be attached to the applicator tool as shown below. Limit magnets can be positioned at any user-defined location along the scale, but the reference mark selector magnet should be positioned adjacent to the selected *IN-TRAC* reference mark as shown below.

As the VIONiC readhead passes the reference mark selector magnet or limit switch magnet, a force of up to 0.2 N is generated between the magnet and the concentrators on the readhead. The design of the bracket should be sufficiently stiff so that it is able to tolerate such force without distorting. Following the clamping instructions on the scale installation will prevent this magnetic force from disturbing the scale.

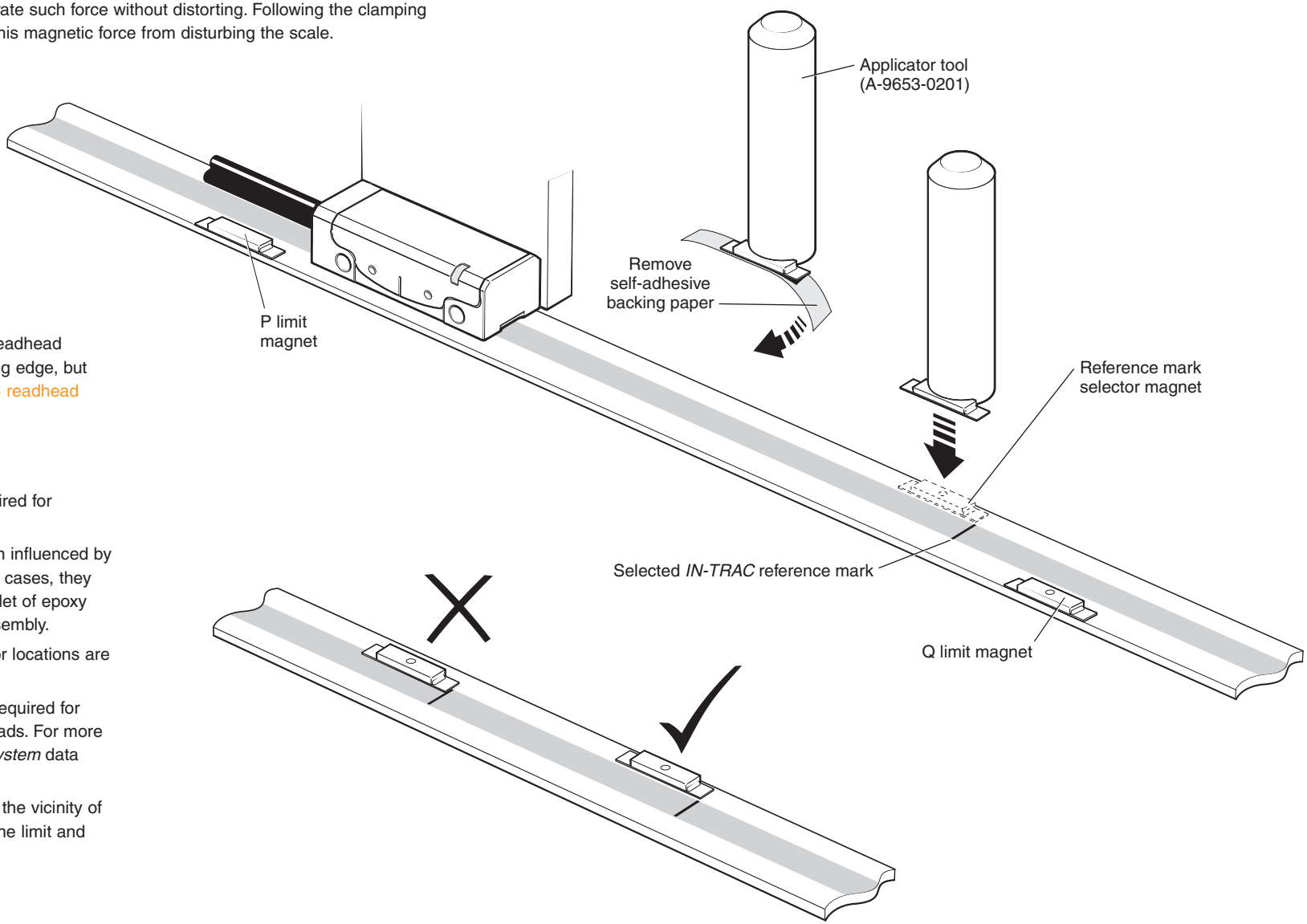

Limit trigger point

The limit output is nominally asserted when the readhead limit switch sensor passes the limit magnet leading edge, but can trigger up to 3 mm before that edge ('VIONiC readhead installation drawing', page 4).

NOTES:

- Reference mark selector magnet is only required for RSLC20 scales.
- Reference and limit magnets may creep when influenced by magnetic materials in close proximity. In such cases, they should be held in place using an additional fillet of epoxy glue or similar at each end of the magnet assembly.
- The reference mark selector and limit actuator locations are correct for the readhead installation shown.
- The reference mark selector magnet is only required for 'Customer selectable reference mark' readheads. For more information refer to *VIONiC series encoder system* data sheet (Renishaw part no. L-9517-9678).
- External magnetic fields greater than 6mT, in the vicinity of the readhead, may cause false activation of the limit and reference sensors.

VIONiC encoder system quick-start guide

This section is a quick-start guide to installing a VIONiC encoder system.

More detailed information on installing the system is contained on page 12 and page 13 of this installation guide.

The optional Advanced Diagnostic Tool ADTi-100* (A-6165-0100) and ADT View software† can be used to aid installation and calibration.

INSTALLATION

Ensure scale, readhead optical window and mounting faces are clean and free from obstructions.

If required, ensure reference mark selector magnet is correctly positioned ('VIONiC readhead installation drawing', page 4).

Connect the readhead to receiving electronics and power-up. The set-up LED on the readhead will flash.

Install and align the readhead to maximise signal strength over the full axis of travel as indicated by a Green flashing LED.

CALIBRATION

Cycle the power to the readhead to initiate the calibration routine. The LED will single flash Blue.

Move the readhead along the scale at slow speed (< 100 mm/s), without passing a reference mark, until the LED starts double flashing Blue.

No reference mark

If a reference mark is not being used, the calibration routine should now be exited by cycling the power. The LED will stop flashing.

Reference mark

Move the readhead back and forth over the selected reference mark until the LED stops flashing.

The system is now calibrated and ready for use. Calibration values, Automatic Gain Control (AGC) and Automatic Offset Control (AOC) status are stored in readhead non-volatile memory at power down.
NOTE: If calibration fails, restore factory defaults by obscuring the readhead optical window on power-up (page 14). Repeat the installation and calibration routine.

*For more details refer to the *Advanced Diagnostic Tool ADTi-100 and ADT View software* quick-start guide (Renishaw part no. M-6195-9321) and *Advanced Diagnostic Tool ADTi-100 and ADT View software* user guide (Renishaw part no. M-6195-9413).
†The software can be downloaded for free from **www.renishaw.com/adt**

Readhead mounting and alignment

Mounting brackets

The bracket must have a flat mounting surface and should provide adjustment to enable conformance to the installation tolerances, allow adjustment to the rideheight of the readhead, and be sufficiently stiff to prevent deflection or vibration of the readhead during operation.

Readhead set-up

Ensure that the scale, readhead optical window and mounting face are clean and free from obstructions.

NOTE: When cleaning readhead and scale apply cleaning fluid sparingly; do not soak.

To set nominal rideheight, place the green spacer with the aperture under the optical centre of the readhead to allow normal LED function during set-up procedure. Adjust the readhead to achieve a flashing Green LED along the full axis of travel. The faster the flash rate, the closer it is to optimum set-up. The optional Advanced Diagnostic Tool ADTi-100 (A-6195-0100) and ADT View software can be used to optimise signal strength in challenging installations. See **www.renishaw.com/adt** for more information.

NOTE: When re-installing the readhead factory defaults should be restored (page 14).

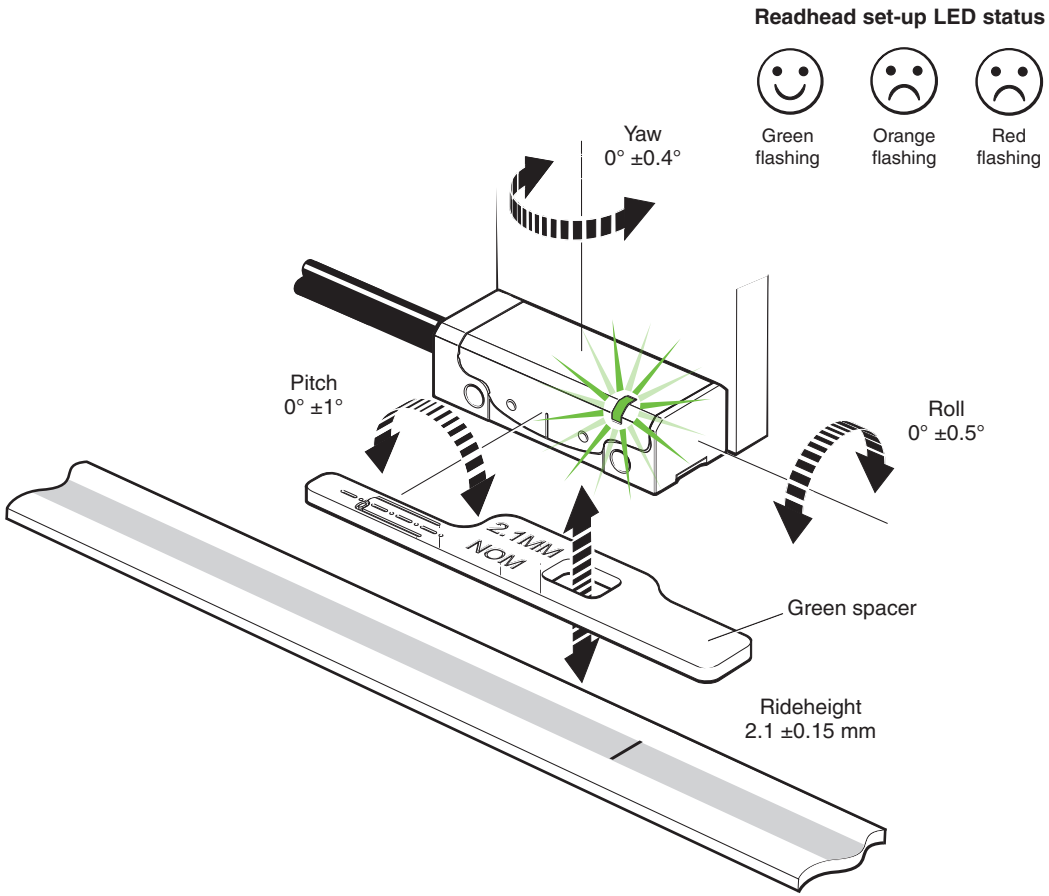

Readhead LED diagnostics

Mode	LED	Status
Installation mode	Green flashing	Good set-up, maximise flash rate for optimum set-up
	Orange flashing	Poor set-up, adjust readhead to obtain Green flashing LED
	Red flashing	Poor set-up, adjust readhead to obtain Green flashing LED
Calibration mode	Blue single flashing	Calibrating incremental signals
	Blue double flashing	Calibrating reference mark
Normal operation	Blue	AGC on, optimum set-up
	Green	AGC off, optimum set-up
	Red	Poor set-up; signal may be too low for reliable operation
	Blank flash	Reference mark detected (visible indication at speed < 100 mm/s only)
Alarm	4 red flashes	Low signal, over signal, or overspeed; system in error

System calibration

NOTE: The functions described below can also be carried out using the optional ADTi-100 and ADT View software. See **www.renishaw.com/adt** for more information.

Ensure signal strength has been optimised along the full axis of travel, the LED will be flashing Green. Cycle the power to the readhead or connect the 'Remote CAL' output pin to 0 V for < 3 seconds. The readhead will then single flash Blue to indicate it is in calibration mode as detailed in 'Readhead mounting and alignment', page 12. The readhead will only enter calibration mode if the LED is flashing Green.

Step 1 – Incremental signal calibration

- Move the readhead along the axis at slow speed (< 100 mm/s or less than the readhead maximum speed, whichever is slowest), ensuring it does not pass a reference mark, until the LED starts double-flashing indicating the incremental signals are now calibrated and the new settings are stored in the readhead memory.
- The system is now ready for reference mark phasing. For systems without a reference mark, cycle the power to the readhead or connect the 'Remote CAL' output pin to 0 V for < 3 seconds to exit calibration mode.
- If the system does not automatically enter the reference mark phasing stage (LED continues single flashing) the calibration of the incremental signals has failed. After ensuring failure is not due to overspeed (> 100 mm/s or exceeding the readhead maximum speed), exit the calibration routine, restore factory defaults as detailed below, and check the readhead installation and system cleanliness before repeating the calibration routine.

Step 2 – Reference mark phasing

- Move the readhead back and forth over the selected reference mark until the LED stops flashing and remains solid Blue (or Green if AGC is disabled). The reference mark is now phased.
- The system automatically exits the calibration routine and is ready for operation.
- AGC and AOC are automatically switched on once calibration is complete. To switch off AGC refer to 'Enabling/disabling AGC', page 14.
- If the LED continues double-flashing after repeatedly passing the chosen reference mark it is not being detected.
  - Ensure that the correct readhead configuration is being used. Readheads can either output all reference marks or only output a reference mark where a reference selector magnet is fitted depending on the options chosen when ordering.
  - Check reference mark selector magnet is fitted in the correct location relative to readhead orientation ('VIONiC readhead installation drawing', page 4).

Calibration routine manual exit

- To exit the calibration routine at any stage cycle the power to the readhead or connect the 'Remote CAL' output pin to 0 V for < 3 seconds. The LED will then stop flashing.

LED	Settings stored
Blue single flashing	None, restore factory defaults and recalibrate
Blue double flashing	Incremental only
Blue (auto-complete)	Incremental and reference mark

Restoring factory defaults

When re-installing the system, or in the case of continued calibration failure, factory defaults should be restored.

To restore factory defaults:

- Switch system off.
- Obscure the readhead optical window (using the spacer supplied with the readhead ensuring the cut-out is NOT under the optical window) or connect the ‘Remote CAL’ output pin to 0 V.
- Power the readhead.
- Remove the spacer or, if using, the connection from the ‘Remote CAL’ output pin to 0 V.
- The LED will start continuously flashing indicating factory defaults have been restored and the readhead is in installation mode (flashing set-up LED).
- Repeat ‘Readhead set-up’ procedure on page 12.

Enabling/disabling AGC

The AGC is switched on once the system has been calibrated indicated by a Blue LED. AGC can be manually switched off by connecting the ‘Remote CAL’ output pin to 0 V for > 3 seconds < 10 seconds. The LED will then be solid Green.

Output signals

Digital outputs

Function	Signal		Colour	9-way D-type (A)	15-way D-type (D)	15-way D-type alternative pin-out (H)	12-way circular connector† (X)	14-way JST (J)‡
Power	5 V		Brown	5	7, 8	4, 12	G	10
	0 V		White	1	2, 9	2, 10	H	1
Incremental	A	+	Red	2	14	1	M	7
		–	Blue	6	6	9	L	2
	B	+	Yellow	4	13	3	J	11
		–	Green	8	5	11	K	9
Reference mark	Z	+	Violet	3	12	14	D	8
		–	Grey	7	4	7	E	12
Limits	P		Pink	-	11	8	A	14
	Q		Black	-	10	6	B	13
Alarm	E	–	Orange	-	3	13	F	3
Remote CAL*	CAL		Clear	9	1	5	C	4
Shield	-		Screen	Case	Case	Case	Case	Ferrule

9-way D-type connector (termination code A)

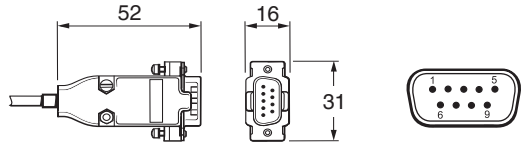

15-way D-type connector (termination code D, H)

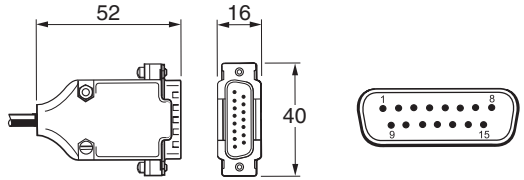

12-way in-line circular connector (termination code X)

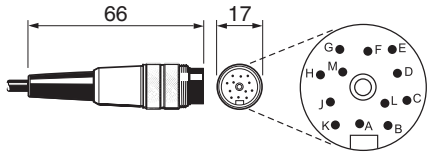

14-way JST connector (termination code J)‡

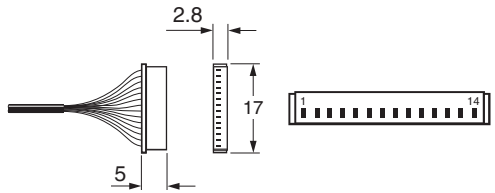

* Remote CAL line must be connected for use with ADTi-100.
† 12-way circular Binder mating socket – A-6195-0105.
‡ Pack of 5 14-way JST SH mating sockets:
A-9417-0025 – Bottom mount;
A-9417-0026 – Side mount.
Maximum of 20 insertion cycles for JST connector.

Speed

Clocked output option (MHz)	Maximum speed (m/s)												Minimum edge separation* (ns)
	5 µm (D)	1 µm (X)	0.5 µm (Z)	0.2 µm (W)	0.1 µm (Y)	50 nm (H)	40 nm (M)	25 nm (P)	20 nm (I)	10 nm (O)	5 nm (Q)	2.5 nm (R)	
50	12	12	12	7.25	3.63	1.81	1.45	0.906	0.725	0.363	0.181	0.091	25.3
40	12	12	12	5.80	2.90	1.45	1.16	0.725	0.580	0.290	0.145	0.073	31.8
25	12	12	9.06	3.63	1.81	0.906	0.725	0.453	0.363	0.181	0.091	0.045	51.2
20	12	12	8.06	3.22	1.61	0.806	0.645	0.403	0.322	0.161	0.081	0.040	57.7
12	12	10.36	5.18	2.07	1.04	0.518	0.414	0.259	0.207	0.104	0.052	0.026	90.2
10	12	8.53	4.27	1.71	0.850	0.427	0.341	0.213	0.171	0.085	0.043	0.021	110
08	12	6.91	3.45	1.38	0.690	0.345	0.276	0.173	0.138	0.069	0.035	0.017	136
06	12	5.37	2.69	1.07	0.540	0.269	0.215	0.134	0.107	0.054	0.027	0.013	175
04	12	3.63	1.81	0.730	0.360	0.181	0.145	0.091	0.073	0.036	0.018	0.009	259
01	4.53	0.910	0.450	0.180	0.090	0.045	0.036	0.023	0.018	0.009	0.005	0.002	1038

*For a readhead with a 1 m cable.

Electrical connections

Grounding and shielding

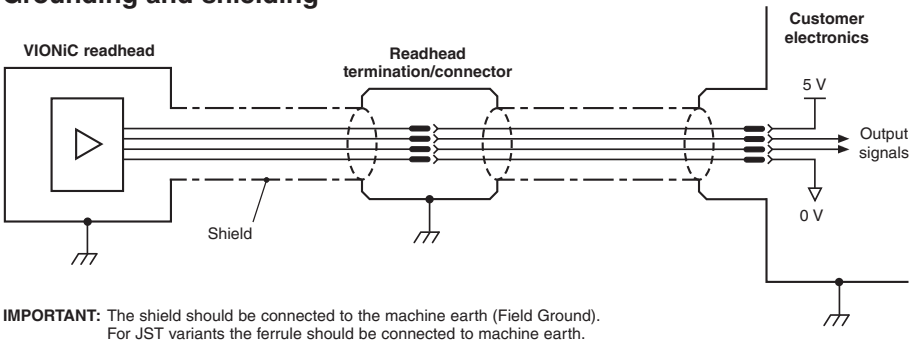

IMPORTANT: The shield should be connected to the machine earth (Field Ground).
For JST variants the ferrule should be connected to machine earth.

Maximum readhead cable length: 3 m

Maximum extension cable length: Dependent on cable type, readhead cable length and clock speed.
Contact your local Renishaw representative for more information.

NOTE: The maximum cable length between the readhead and the ADTi-100 is 3 m.

Recommended signal termination

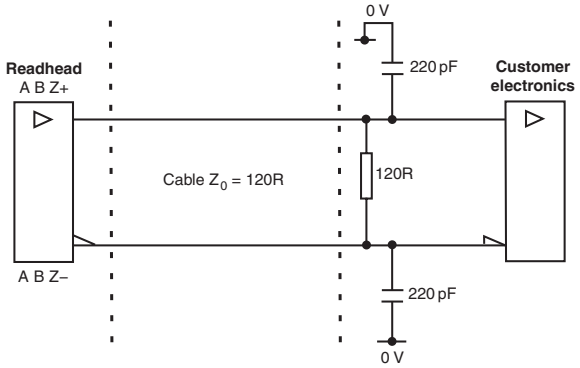

Standard RS422A line receiver circuitry.

Capacitors recommended for improved noise immunity.

Limit output

(Not available with 'A' cable termination)

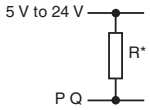

* Select R so that maximum current does not exceed 10 mA. Alternatively, use a suitable relay or opto-isolator.

Single ended alarm signal termination

(Not available with 'A' cable termination)

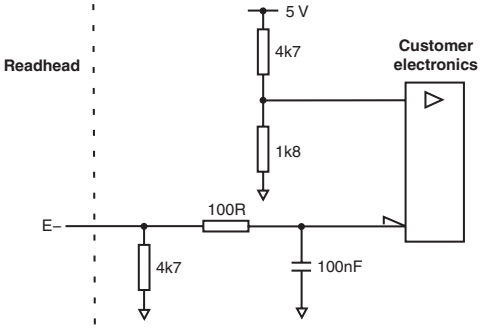

Remote CAL operation

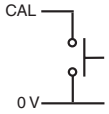

Remote operation of the CAL/AGC is possible via CAL signal.

Output specifications

Digital output signals

Form – Square wave differential line driver to EIA RS422A (except limits P and Q)

Incremental* 2 channels A and B in quadrature (90° phase shifted)

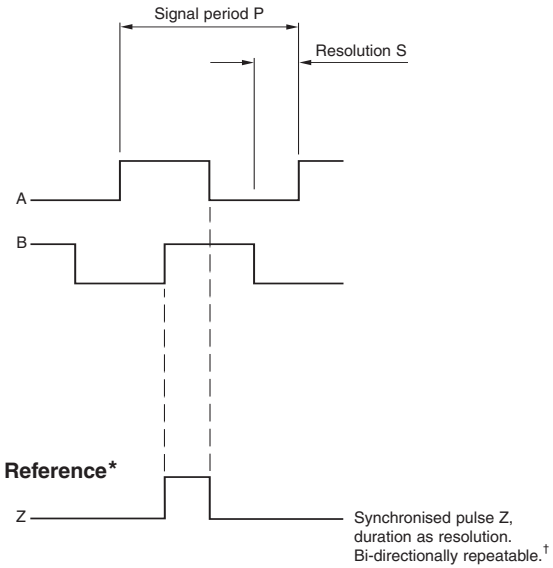

Resolution option code	P (µm)	S (µm)
D	20	5
X	4	1
Z	2	0.5
W	0.8	0.2
Y	0.4	0.1
H	0.2	0.05
M	0.16	0.04
P	0.1	0.025
I	0.08	0.02
O	0.04	0.01
Q	0.02	0.005
R	0.01	0.0025

NOTE: A wide reference mark option, outputting a reference pulse for the duration of the signal period is available. Contact your local Renishaw representative for more information.

Limits Open collector output, asynchronous pulse

(Not available with 'A' cable termination)

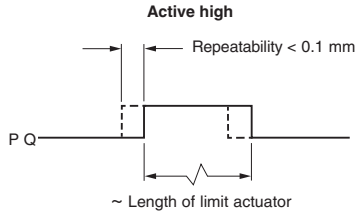

Alarm

Line driven (Asynchronous pulse)
(Not available with 'A' cable termination)

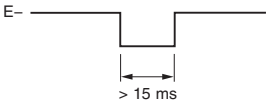

Alarm asserted when:
– Signal amplitude < 20% or > 135%
– Readhead speed too high for reliable operation

or 3-state alarm

Differentially transmitted signals forced open circuit for > 15 ms when alarm conditions valid.

*Inverse signals not shown for clarity.

†Only calibrated reference mark is bi-directionally repeatable.

General specifications

Power supply	5 V –5%/+10%	Typically 200 mA fully terminated Power from a 5 Vdc supply complying with the requirements for SELV of standard IEC 60950-1
	Ripple	200 mVpp maximum @ frequency up to 500 kHz
Temperature	Storage	–20 °C to +70 °C
	Operating	0 °C to +70 °C
Humidity		95% relative humidity (non-condensing) to IEC 60068-2-78
Sealing		IP40
Acceleration (system)	Operating	400 m/s², 3 axes
Shock (system)	Operating	500 m/s², 11 ms, ½ sine, 3 axes
Vibration (system)	Operating	100 m/s² max @ 55 Hz to 2000 Hz, 3 axes
Mass	Readhead	8.6 g
	Cable	26 g/m
Readhead cable		Single-shielded, outside diameter 4.25 ±0.25 mm Flex life > 20 × 10^6 cycles at 30 mm bend radius UL recognised component
Maximum readhead cable length*		3 m

* Extension cables available. Contact your local Renishaw representative for further details.

CAUTION: Renishaw encoder systems have been designed to the relevant EMC standards, but must be correctly integrated to achieve EMC compliance. In particular, attention to shielding arrangements is essential.

RSLM20 scale technical specifications

Form (H × W)	1.5 mm × 14.9 mm
Pitch	20 µm
Accuracy (at 20 °C)	±1.5 µm for lengths up to 1 m ±2.25 µm for lengths from 1 m to 2 m ±3 µm for lengths from 2 m to 3 m ±4 µm for lengths from 3 m to 5 m (includes slope and linearity) Calibration traceable to International Standards
Supplied lengths	20 mm to 5 m (available in increments of 10 mm)
Material	Hardened martensitic stainless steel
Coefficient of thermal expansion (at 20 °C)	10.1 ±2 µm/m/°C
Mounting	Epoxy datum point and adhesive tape (nominal thickness 0.2 mm) or datum clamp and mounting clips
Mass	172 g/m
Storage	Lengths over 1.13 m are coiled (> 600 mm diameter)

Reference mark

Type	*IN-TRAC* auto-phase optional reference mark, no physical adjustments required	
Position	RSLM20	Midpoint of scale length
	RSLE20	(Option A) – 20 mm from end of scale (for use with 10 mm limits)
	RSLE20	(Option B) – 70 mm from end of scale (for use with 20 mm and 50 mm limits)
	RSLC20	Selectable reference marks every 200 mm
Phasing	Auto-phased by readhead calibration routine	
Repeatability	Repeatability to unit of resolution throughout specified temperature range	

Limit switches

Type	Magnetic actuators; with dimple triggers Q limit, without dimple triggers P limit ('VIONiC readhead installation drawing', page 4)
Trigger point	The limit output is nominally asserted when the readhead limit switch sensor passes the limit magnet leading edge, but can trigger up to 3 mm before that edge
Mounting	Customer placed at desired locations
Repeatablity	< 0.1 mm

RELM20 scale technical specifications

Form (H × W)	1.6 mm × 14.9 mm
Pitch	20 µm
Accuracy (at 20 °C) (includes slope and linearity)	Certified to ±1 µm for lengths up to 1 m, ±1 µm/m for lengths > 1 m to 1.5 m Calibration traceable to International Standards
Supplied lengths	20 mm to 1.5 m (available in increments of 10 mm)
Material	ZeroMet™. High stability, low-expansion nickel-iron alloy
Coefficient of thermal expansion (at 20 °C)	0.75 ±0.35 µm/m/°C
Mounting	Epoxy datum point and adhesive tape (nominal thickness 0.2 mm) or datum clamp and mounting clips
Mass	184 g/m

Reference mark

Type	*IN-TRAC* auto-phase optional reference mark, no physical adjustments required	
Position	RELM20	Midpoint of scale length
	RELE20	20 mm from end of scale
Phasing	Auto-phased by readhead calibration routine	
Repeatability	Repeatability to unit of resolution throughout specified temperature range	

Limit switches

Type	Magnetic actuators; with dimple triggers Q limit, without dimple triggers P limit ('VIONiC readhead installation drawing', page 4)
Trigger point	The limit output is nominally asserted when the readhead limit switch sensor passes the limit magnet leading edge, but can trigger up to 3 mm before that edge
Mounting	Customer placed at desired locations
Repeatablity	< 0.1 mm

Renishaw plc
New Mills, Wotton-under-Edge,
Gloucestershire GL12 8JR
United Kingdom

T +44 (0)1453 524524
F +44 (0)1453 524901
E uk@renishaw.com
www.renishaw.com

RENISHAW
apply innovation™

For worldwide contact details, visit www.renishaw.com/contact

M-6195-9232-03

Renishaw plc. Registered in England and Wales. Company no: 1106260.
Registered office: New Mills, Wotton-under-Edge, Gloucestershire, GL12 8JR, UK.

Part no.: M-6195-9232-03-D
Issued: 07.2021