RENISHAW
apply innovation™

MP250 high-accuracy machine probe



Specification

Principal application	Workpiece inspection and job set-up on CNC grinders.	
Weight	64 g (2.26 oz)	
Transmission type	Hard-wired transmission	
Recommended styli	High modulus carbon fibre, lengths 50.0 mm (1.97 in) or 100.0 mm (3.94 in).	
Compatible receiver / interface	HSI hard-wired system interface or HSI-C hard-wired system interface – configurable	
Sense directions	±X, ±Y, +Z	
Unidirectional repeatability	0.25 µm (10 µin) 2σ – 35 mm stylus length [1]	
X, Y (2D) form measurement deviation	±0.25 µm (10 µin) – 35 mm stylus length [1]	
X, Y, Z (3D) form measurement deviation	±1.00 µm (40 µin) – 35 mm stylus length [1]	
Stylus trigger force [2 5]	XY plane (typical minimum) +Z direction (typical minimum)	0.08 N, 8.0 gf (0.29 ozf) 2.25 N, 229.0 gf (8.09 ozf)
Stylus overtravel	XY plane (typical minimum) +Z direction (typical minimum)	0.70 N, 71.3 gf (2.52 ozf) [3 5] 5.0 N, 510 gf (18.0 ozf) [4 5]
Minimum probing speed	3 mm/min (0.12 in/min)	
Environment	IP rating	IP68, BS EN 60529:1992+A2:2013
	Storage temperature	–25 °C to +70 °C (–13 °F to +158 °F)
	Operating temperature	+5 °C to +55 °C (+41 °F to +131 °F)
	Indoor/outdoor use	Indoor use
	Altitude	< 3000 m (9843 ft)
	Relative humidity	5% to 95%
	Wet location	Yes, water/oil/coolant
	Pollution degree	Level 2

[1] Performance specification is tested at a standard test velocity of 240 mm/min (9.45 in/min) using a 35 mm stylus. Significantly higher velocity is possible depending on application requirements.

[2] Trigger force, which is critical in some applications, is the force exerted on the component by the stylus when the probe triggers. The maximum force applied will occur after the trigger point (overtravel). The force value depends on related variables including measuring speed and machine deceleration. RENGAGE equipped probes offer ultra low trigger forces.

[3] Stylus overtravel force in XY plane occurs 50.0 µm (1968.50 µin) after the trigger point and rises by 0.12 N/mm, 12 gf/mm (0.02 ozf/in) until the machine tool stops (in the high force direction).

[4] Stylus overtravel force in + Z direction occurs 1.0 µm (39.37 µin) after the trigger point and rises by 0.6 N/mm, 61 gf/mm (0.08 ozf/in) until the machine tool stops.

[5] These are the factory settings, applicable when used with the HSI-C interface, level 2 default configuration for general usage, using a 50 mm stylus.

Dimensions

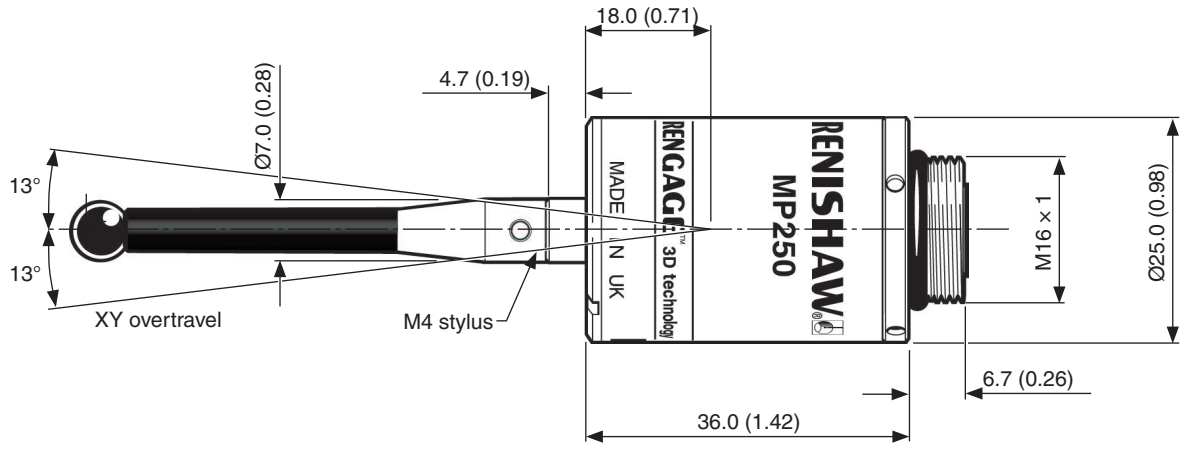

Stylus overtravel limits		
Stylus length	**±X/±Y**	**+Z**
50 (1.97)	15 (0.59)	6.5 (0.26)
100 (3.94)	26 (1.02)	6.5 (0.26)

Dimensions given in mm (in)

RENISHAW
apply innovation™

Typical MP250 system

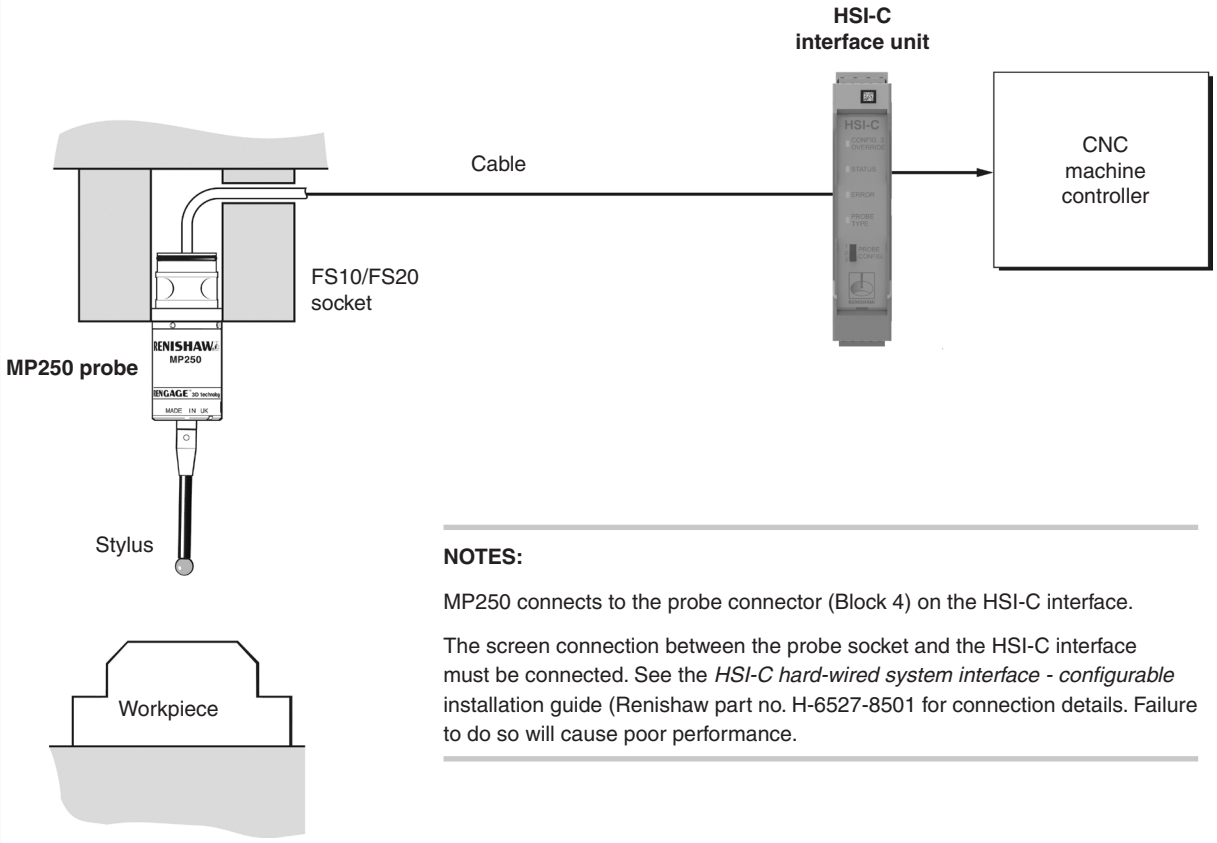

NOTES:

MP250 connects to the probe connector (Block 4) on the HSI-C interface.

The screen connection between the probe socket and the HSI-C interface must be connected. See the *HSI-C hard-wired system interface - configurable* installation guide (Renishaw part no. H-6527-8501 for connection details. Failure to do so will cause poor performance.

Spare parts and accessories

A full range of spare parts and accessories is available. Contact Renishaw for a full list.

www.renishaw.com/contact

#renishaw

+44 (0) 1453 524524 **uk@renishaw.com**

© 2010–2026 Renishaw plc. All rights reserved. This document may not be copied or reproduced in whole or in part, or transferred to any other media or language by any means, without the prior written permission of Renishaw.
RENISHAW® and the probe symbol are registered trade marks of Renishaw plc. Renishaw product names, designations and the mark 'apply innovation' are trade marks of Renishaw plc or its subsidiaries. Other brand, product or company names are trade marks of their respective owners.
WHILE CONSIDERABLE EFFORT WAS MADE TO VERIFY THE ACCURACY OF THIS DOCUMENT AT PUBLICATION, ALL WARRANTIES, CONDITIONS, REPRESENTATIONS AND LIABILITY, HOWSOEVER ARISING, ARE EXCLUDED TO THE EXTENT PERMITTED BY LAW. RENISHAW RESERVES THE RIGHT TO MAKE CHANGES TO THIS DOCUMENT AND TO THE EQUIPMENT, AND/OR SOFTWARE AND THE SPECIFICATION DESCRIBED HEREIN WITHOUT OBLIGATION TO PROVIDE NOTICE OF SUCH CHANGES.
Renishaw plc. Registered in England and Wales. Company no: 1106260. Registered office: New Mills, Wotton-under-Edge, Glos, GL12 8JR, UK.

Part no.: H-5500-8200-08-A
Issued: 11.2026