RENISHAW
apply innovation™

LP2 machine probe



Compliance information for this product is available by scanning the QR code or visiting **www.renishaw.com/mtpdoc**



RENISHAW
apply innovation™

Contents

Before you begin **1-1**
Warranty 1-1
CNC machines 1-1
Care of the probe 1-1
Patents 1-2
Intended use 1-2
Safety 1-3
Information to the user 1-3
Information to the machine supplier / installer 1-3
Information to the equipment installer 1-3
Equipment operation 1-3

LP2 probe system basics **2-1**
Introduction 2-1
Principal applications 2-1
Horizontal lathes 2-1
Machining centre applications 2-1
Signal transmission systems 2-1
Interface unit 2-1
LP2 probe types 2-2
LP2 modular system 2-3
LP2 probe moves 2-4
Probe trigger 2-4
Single and double touch 2-4
System delays 2-5
Specification 2-6
Dimensions 2-7

System installation **3-1**
Typical LP2 probe systems 3-1
Machining centres (radio transmission) 3-1
Machining centres (optical transmission) when using an OMI-2/OMI-2T/OMI-2H or an OMM-2 with an OSI/OSI-D interface 3-2
Machining centres (optical transmission) when using an OMM-2C with an OSI/OSI-D interface 3-3
Machining centres (hard-wired transmission) 3-4
Machining centres (hard-wired transmission - tool setting) 3-5

Lathes (radio transmission) 3-6
Lathes (optical transmission) 3-7
Lathes (hard-wired transmission) 3-8
Recommended connection diagram for LP2 with HSI-C interface 3-9
Recommended connection diagram for LP2 with HSI interface 3-10
Recommended connection diagram for LP2 with MI 8-4 interface 3-11
Stylus spring force adjustment 3-12
Stylus on-centre adjustment with probe holders and sockets 3-13
Stylus on-centre adjustment 3-13
Lathes – inspection 3-13
Lathes and machining centres 3-13
Stylus on-centre adjustment with shank adaptor or shank 3-14
Screw torque values Nm (lbf. ft) 3-15
Calibrating the LP2 3-16
Why calibrate a probe? 3-16
Calibrating in a bored hole or on a turned diameter 3-16
Calibrating in a ring gauge or on a datum sphere 3-16
Calibrating the probe length 3-17
Calibration feedrate and rotary axes 3-17
Software requirements 3-18
Software for turning and machining centres 3-18
Verify your software 3-18

Maintenance 4-1
Service 4-1
Maintenance 4-1
Cleaning the probe front seal 4-2
LP2 – LP2H 4-2
LP2DD – LP2HDD 4-2
LP2 – LP2H – LP2DD – LP2HDD 4-2

Fault-finding 5-1

Parts list 6-1

Before you begin

Warranty

Unless you and Renishaw have agreed and signed a separate written agreement, the equipment and/or software are sold subject to the Renishaw Standard Terms and Conditions supplied with such equipment and/or software, or available on request from your local Renishaw office.

Renishaw warrants its equipment and software for a limited period (as set out in the Standard Terms and Conditions), provided that they are installed and used exactly as defined in associated Renishaw documentation. You should consult these Standard Terms and Conditions to find out the full details of your warranty.

Equipment and/or software purchased by you from a third-party supplier is subject to separate terms and conditions supplied with such equipment and/or software. You should contact your third-party supplier for details.

CNC machines

CNC machine tools must always be operated by fully-trained personnel in accordance with the manufacturer's instructions.

Care of the probe

Keep system components clean and treat the probe as a precision tool.

CAUTION: Do not drop the probe.

Patents

None applicable

Intended use

The LP2 must only be used as intended. The LP2 is intended for use as a hard-wired spindle probe for automated workpiece inspection and part set-up on CNC machine tools and grinding machines. The LP2 is also used in conjunction with Renishaw modular probes such as RMP40M, RMP60M, OMP40M and OMP60M.

The LP2 must only be used with compatible Renishaw hardware, applicable Renishaw programming software, and within the environmental conditions specified in this guide.

Safety

Information to the user

In all applications involving the use of machine tools, eye protection is recommended.

The LP2 system must be installed by a competent person, observing relevant safety precautions. Before starting work, ensure that the machine tool is in a safe condition with the power switched OFF and the power supply to the HSI-C / HSI / MI 8-4 is disconnected.

Refer to the machine supplier's operating instructions.

Information to the machine supplier / installer

It is the machine supplier's responsibility to ensure that the user is made aware of any hazards involved in operation, including those mentioned in Renishaw product literature, and to ensure that adequate guards and safety interlocks are provided.

If the probe system fails, the output signal may falsely indicate a probe seated condition. Do not rely on probe signals to halt the movement of the machine.

Information to the equipment installer

All Renishaw equipment is designed to comply with the relevant UK, EU and FCC regulatory requirements. It is the responsibility of the equipment installer to ensure that the following guidelines are adhered to, in order for the product to function in accordance with these regulations:

- any interface MUST be installed in a position away from any potential sources of electrical noise (for example, power transformers, servo drives);
- all 0 V/ground connections should be connected to the machine "star point" (the "star point" is a single point return for all equipment ground and screen cables). This is very important and failure to adhere to this can cause a potential difference between grounds;
- all screens must be connected as outlined in the user instructions;
- cables must not be routed alongside high current sources (for example, motor power supply cables), or be near high-speed data lines;
- cable lengths should always be kept to a minimum.

Equipment operation

If this equipment is used in a manner not specified by the manufacturer, the protection provided by the equipment may be impaired.

This page is intentionally left blank

LP2 probe system basics

Introduction

The LP2 is a compact and versatile probe for applications on CNC lathes and machining centres. A wide range of styli and accessories is available to provide custom installations.

Principal applications

Horizontal lathes

Small enough to fit on a turret for part measuring, tool setting and broken tool detection when mounted in a suitable position.

Machining centre applications

Set-up and part measuring when spindle mounted. Tool setting and broken tool detection when table mounted.

Signal transmission systems

- **Hard-wired** – a range of hard-wired probe sockets is available for inspection and tool setting applications. For machining centres with manual tool change the LP2 will fit the MA2 probe holder.
- **Optical or radio** – for lathes and machining centres. Easy installation, particularly in retrofit applications because there is no need for the prepared passageways required for hard-wired transmission cables. LP2 can be used with OMP40M, OMP60M, RMP40M, RMP60M.
- **HP tool setting arms** – compatible for use with Renishaw HP tool setting arms in lathes, machining centres and grinding centres.

Interface unit

A hard-wired installation with LP2 may use the HSI interface (see the *HSI hard-wired system interface* installation guide (Renishaw part no. H-5500-8554)), the HSI-C interface (see the *HSI-C hard-wired system interface* installation guide (Renishaw part no. H-6527-8501)), or the MI 8-4 interface (see the *MI 8-4 interface unit* installation guide (Renishaw part no. H-2000-5008)).

The FS1i and FS2i probe sockets with integral interface may also be used. For more information on these and other Renishaw probe sockets and extension bars see the *Fixed sockets and extension bars* installation guide (Renishaw part no. H-2000-2073).

LP2 probe types

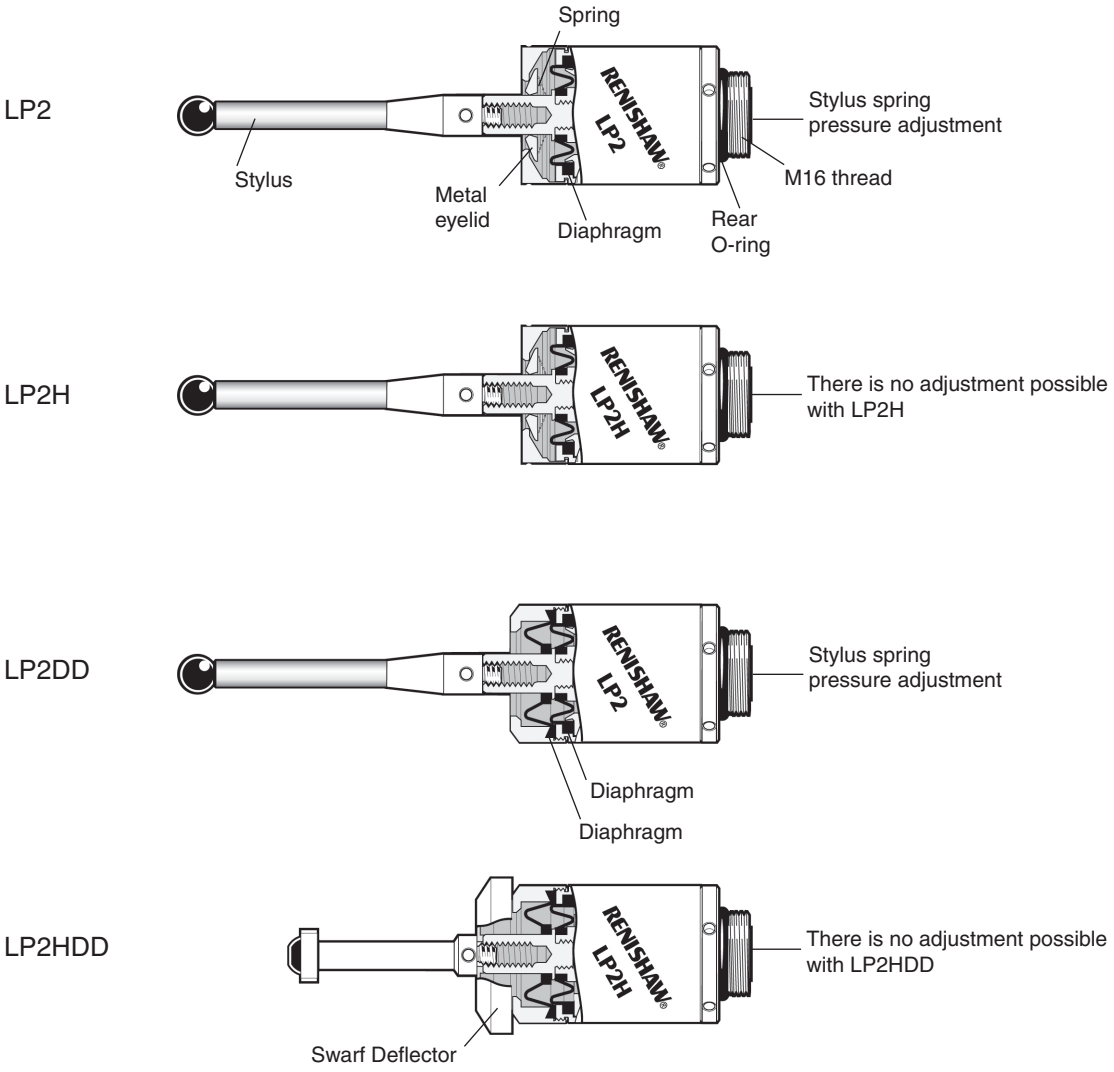

There are four versions of the LP2 probe. Each version is best suited to particular applications:

- **LP2** – For normal setting/inspection. The metal eyelid protects the diaphragm in a hot chip and coolant environment.
- **LP2H** – With higher stylus pressure for long or heavy styli, or where there is excessive machine vibration.
- **LP2DD – LP2HDD** – The double diaphragm (DD) arrangement is recommended for grinding machines and other applications with particle-laden coolant. The LP2HDD is a version with a higher stylus spring pressure, similar to the LP2H.

NOTE: LP2DD probes are available as original equipment, or existing LP2 probes may be converted to the DD standard using a conversion kit.

LP2 modular system

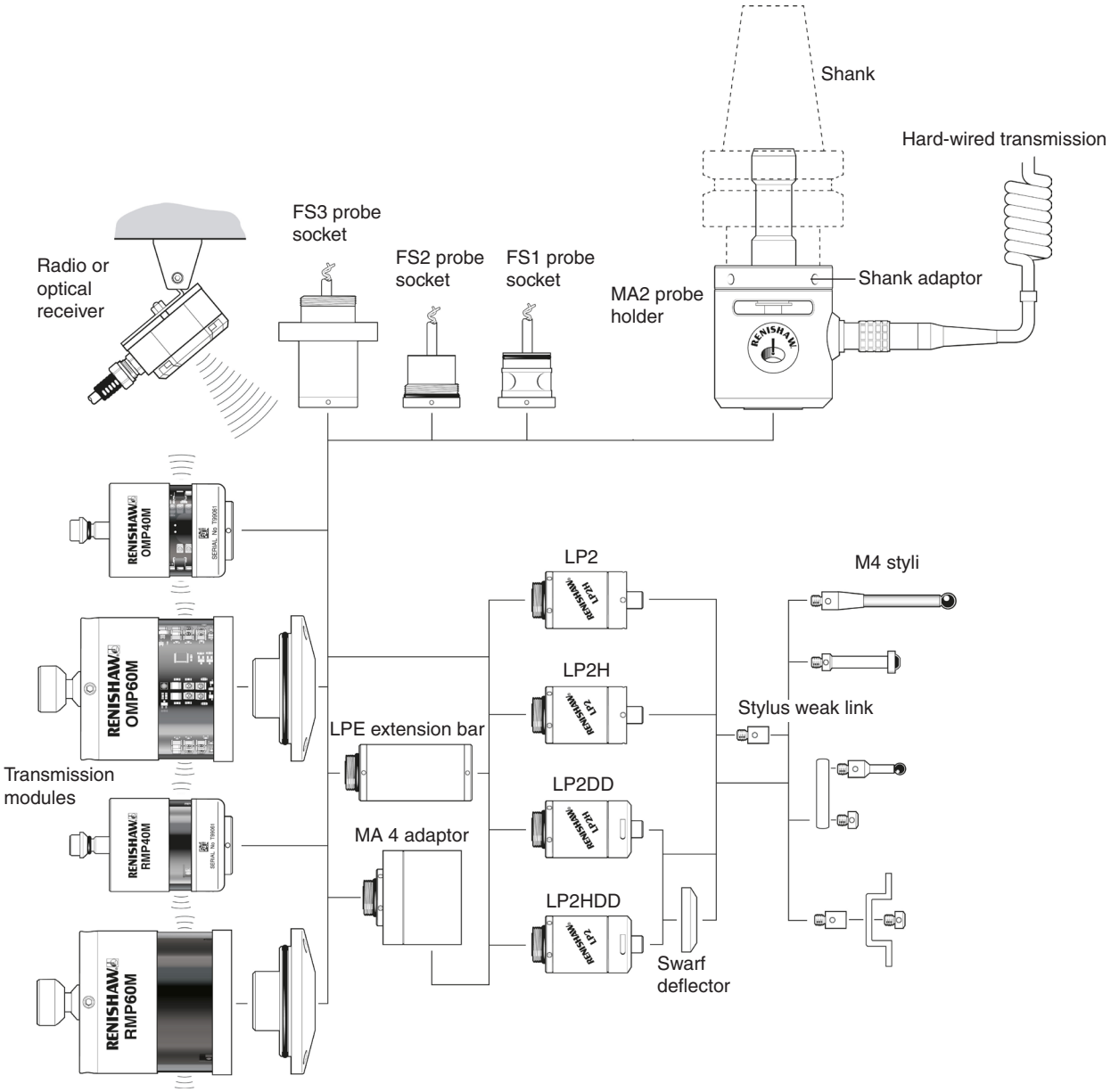

LP2 probe moves

Probe trigger



A probe trigger signal is generated when the probe's stylus is driven against a surface. The machine control records the contact position and instructs the machine motion to stop.

Although high probing speeds are desirable, it is essential to choose a probing velocity which allows the machine to stop within the limits of stylus overtravel and machine measuring capability. Follow feedrate guidelines given by the supplier.

To ensure a trigger signal is generated, drive the probe against the workpiece to a target beyond the expected surface, but within the limits of stylus overtravel.

After the probe stylus touches the surface, reverse clear of the surface.

Single and double touch

If the probe operating sequence is based on a single touch, then, following a gauging move, the probe may be returned to its start point.

With some types of controllers, it is an advantage to use a double touch method as poor repeatability can result from using higher feedrates.

With a double touch sequence, the first move finds the surface quickly, then the probe is reversed to a position clear of the surface before making the second touch at a slower feedrate, thereby recording the surface position at a higher resolution.

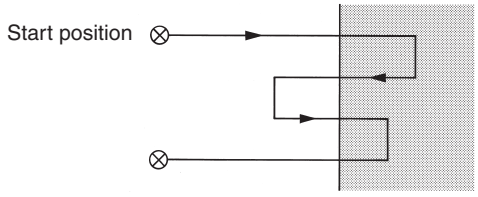

System delays

System delays are repeatable to less than 2 µs and are constant in each direction in which measurement is taken.

Delays are automatically compensated for provided a calibration move is made in the same direction and at the same velocity as each measurement move.

Specification

Variants		LP2 / LP2DD		LP2H / LP2HDD	
Principal application		Workpiece inspection and job set-up on all sizes of lathes, machining centres and CNC grinders.			
Transmission type		Hard-wired, or in conjunction with optical or radio transceiver modules			
Compatible interfaces	Hard-wired Optical Radio	HSI, HSI-C, MI 8-4, FS1i or FS2i OMI-2 / OMI-2T / OMI-2H / OSI or OSI-D with OMM-2 or OMM-2C RMI-Q / RMI-QE			
Recommended styli (stylus material depends on application)		50 mm (1.97 in) to 100 mm (3.94 in)		50 mm (1.97 in) to 150 mm (5.91 in)	
Weight		65 g (2.29 oz)			
Sense directions		±X, ±Y, +Z			
Unidirectional repeatability		1.00 µm (40 µin) 2σ [1]		2.00 µm (80 µin) 2σ [1]	
Stylus trigger force [2] [3] XY low force XY high force +Z direction		 0.50 N, 51 gf (1.80 ozf) 0.90 N, 92 gf (3.24 ozf) 5.85 N, 597 gf (21.04 ozf)		 2.00 N, 204 gf (7.19 ozf) 4.00 N, 408 gf (14.39 ozf) 30.00 N, 3059 gf (107.91 ozf)	
Maximum setting		1.00 N, 102 gf (3.59 ozf) 1.85 N, 188 gf (6.65 ozf) 7.40 N, 754 gf (26.61 ozf)		Not applicable	
Minimum setting		0.25 N, 25 gf (0.90 ozf) 0.50 N, 51 gf (1.80 ozf) 2.35 N, 239 gf (8.45 ozf)		Not applicable	
Stylus overtravel limits	Variant	LP2	LP2DD	LP2H	LP2HDD
	XY plane	14.87 mm (0.55 in) ±12.5°	19.06 mm (0.73 in) ±15°	14.87 mm (0.55 in) ±12.5°	19.06 mm (0.73 in) ±15°
	+Z plane	6.5 mm (0.26 in) 4.5 mm (0.18 in) when fitted with a swarf deflector		5.0 mm (0.20 in) 4.5 mm (0.18 in) when fitted with a swarf deflector	
Mounting		M16 thread, for LPE extension bars and adaptors.			
Environment					
IP rating		IP68, BS EN 60529:1992+A2:2013			
Storage temperature		–25 °C to +70 °C (–13 °F to +158 °F)			
Operating temperature		+5 °C to +55 °C (+41 °F to +131 °F)			
Indoor/outdoor use		Indoor use			
Altitude		≤ 3000 m (9843 ft)			
Relative humidity		5% to 95%			
Wet location		Yes, water/oil/coolant			
Pollution degree		Level 2			

[1] Performance specification is tested at a standard test velocity of 480 mm/min (18.9 in/min) with a 35 mm stylus. Significantly higher velocity is possible depending on application requirements.

[2] Trigger force, which is critical in some applications, is the force exerted on the component by the stylus when the probe triggers. The maximum force applied will occur after the trigger point (overtravel). The force value depends on related variables including measuring speed, machine deceleration and latency.

[3] These are the factory settings, manual adjustment of the LP2/LP2DD is possible, but not possible on LP2H/LP2HDD.

NOTE: For stylus recommendations, refer to the *Styli and accessories* technical specifications (Renishaw part no. H-1000-3200).

Dimensions

LP2/LP2H

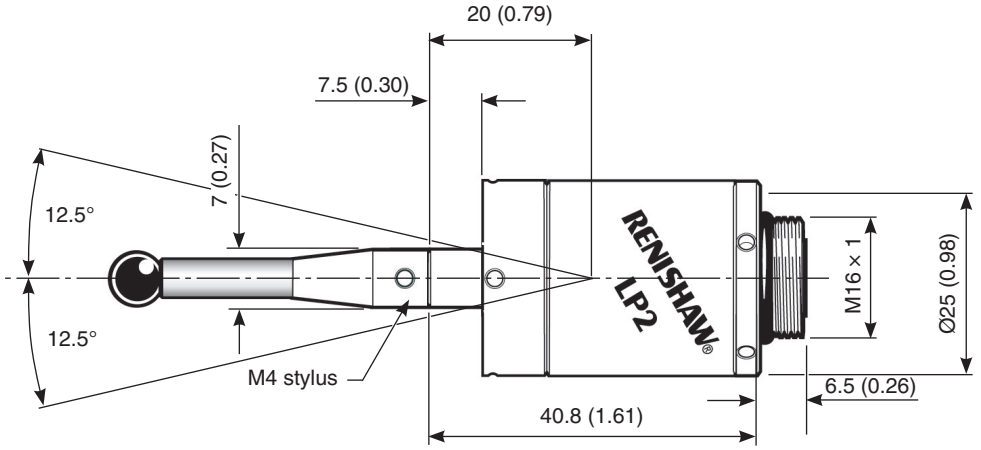

LP2DD/LP2HDD

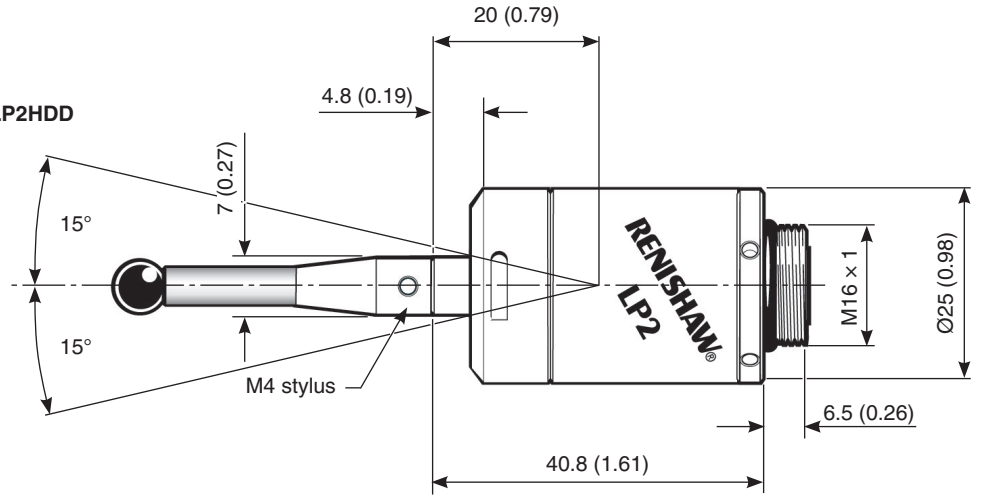

Dimensions in mm (in)

This page is intentionally left blank

System installation

Typical LP2 probe systems

Machining centres (radio transmission)

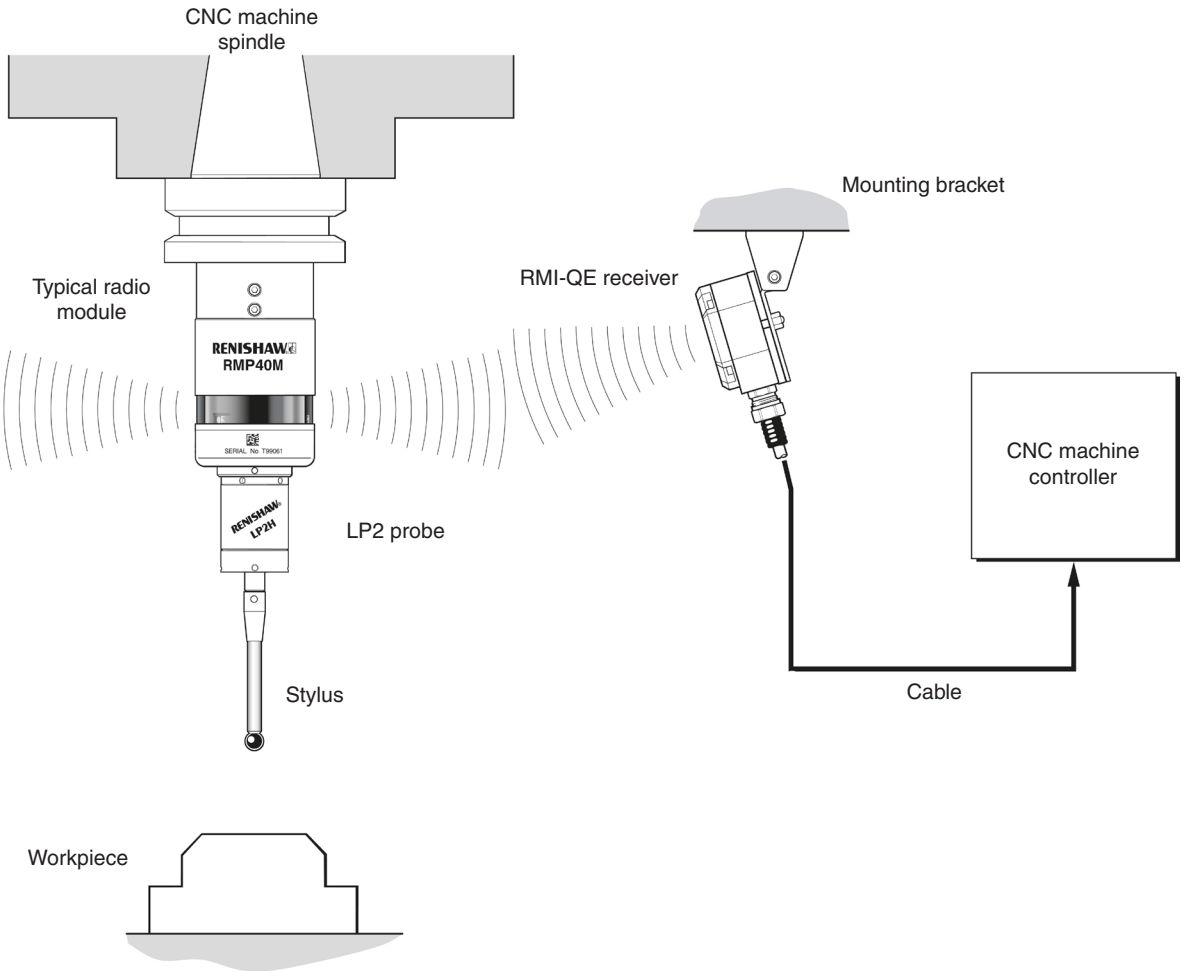

Machining centres (optical transmission) when using an OMI-2/ OMI-2T/OMI-2H or an OMM-2 with an OSI/OSI-D interface

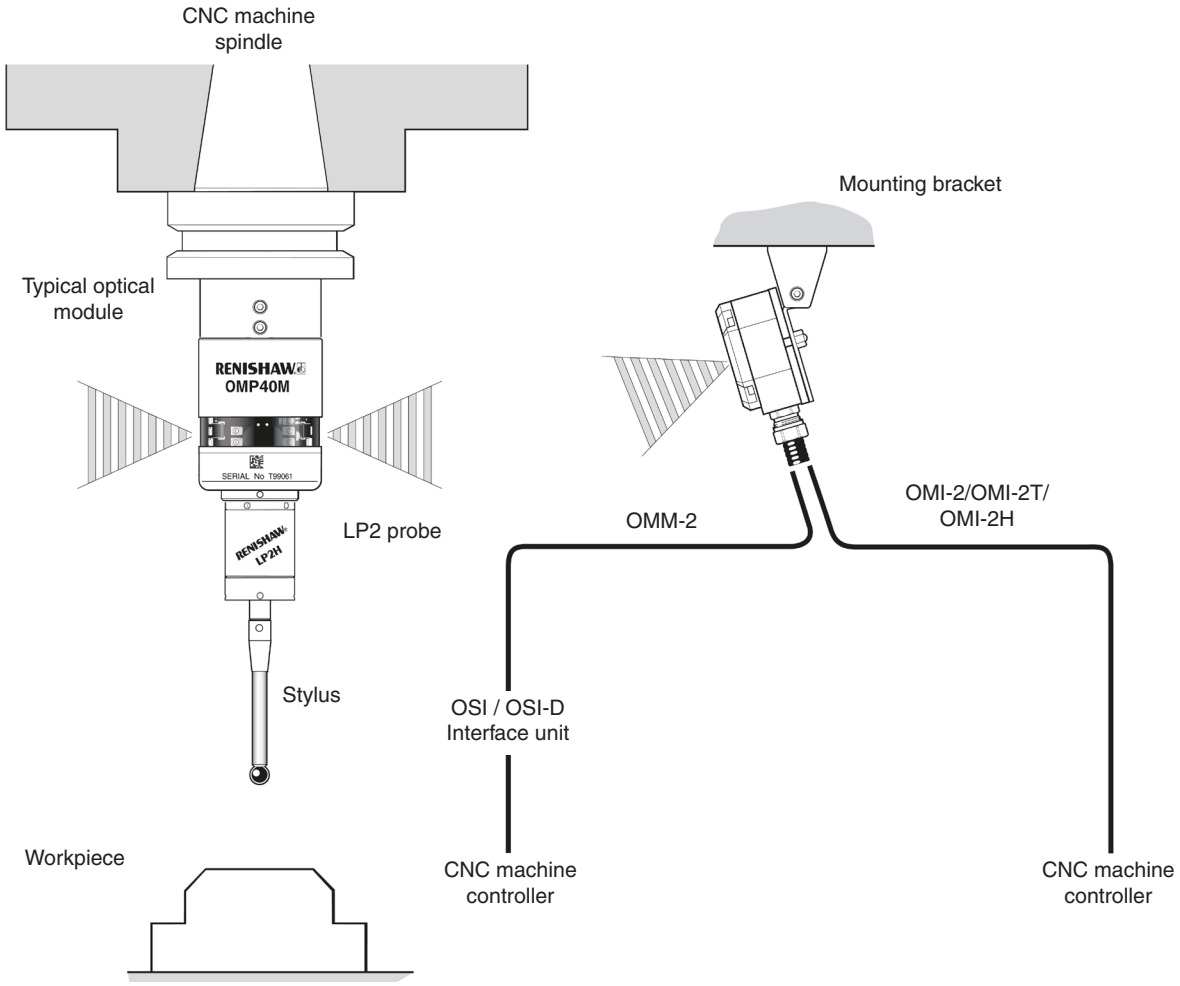

Machining centres (optical transmission) when using an OMM-2C with an OSI/OSI-D interface

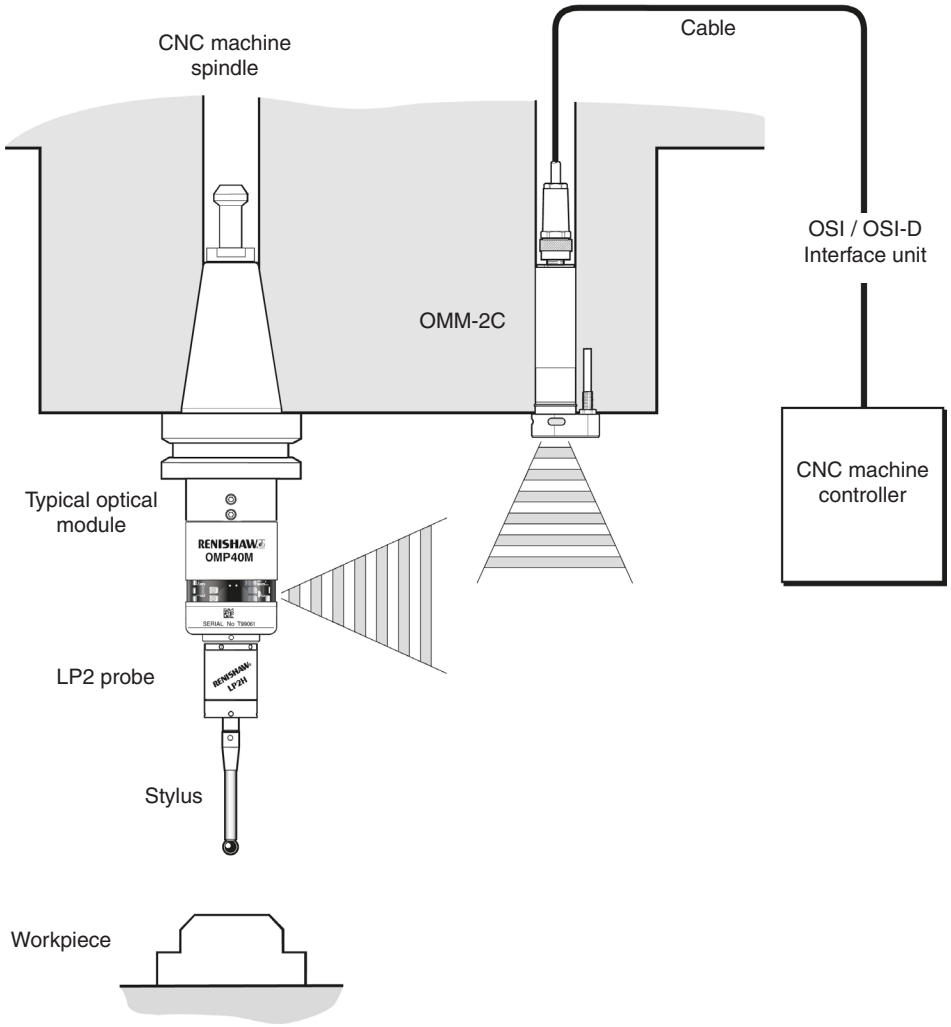

Machining centres (hard-wired transmission)

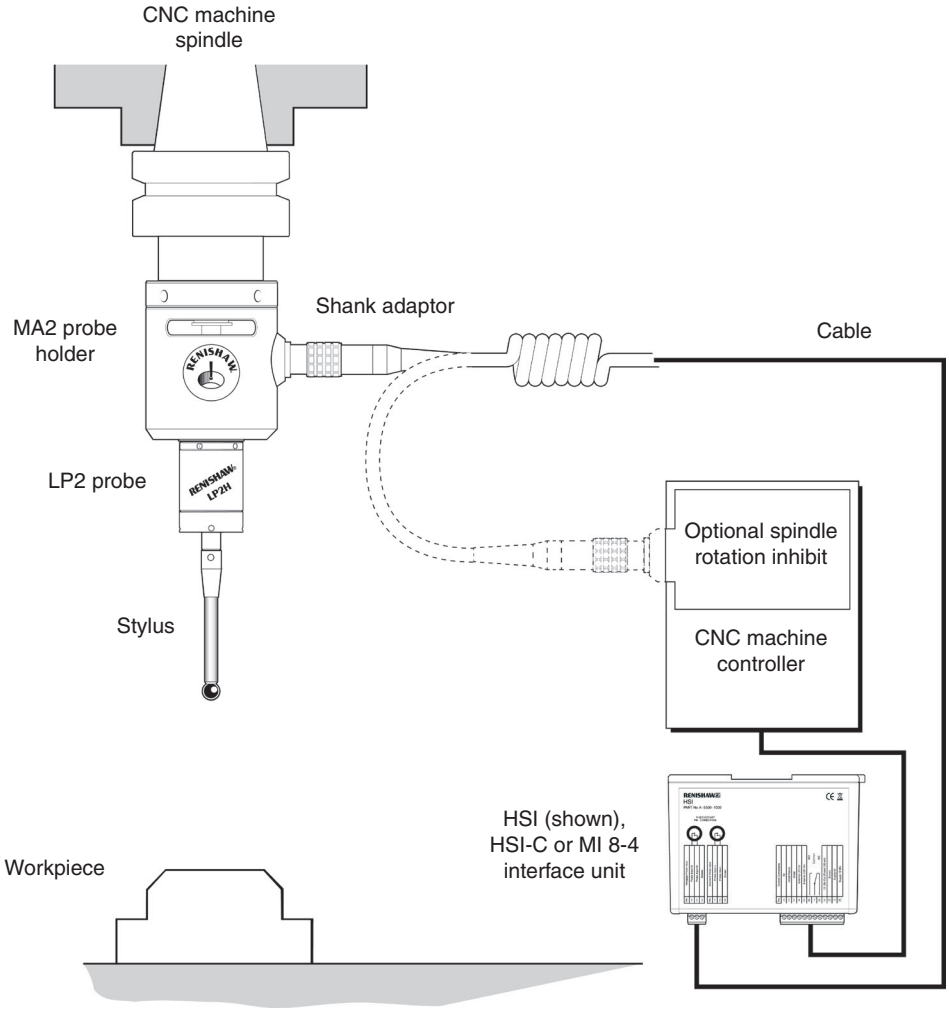

WARNING: The probe should not be rotated (spun) by the machine when the curly cable is connected. If this is allowed to occur, then persons may be injured by flying cable or entanglement.

Machining centres (hard-wired transmission - tool setting)

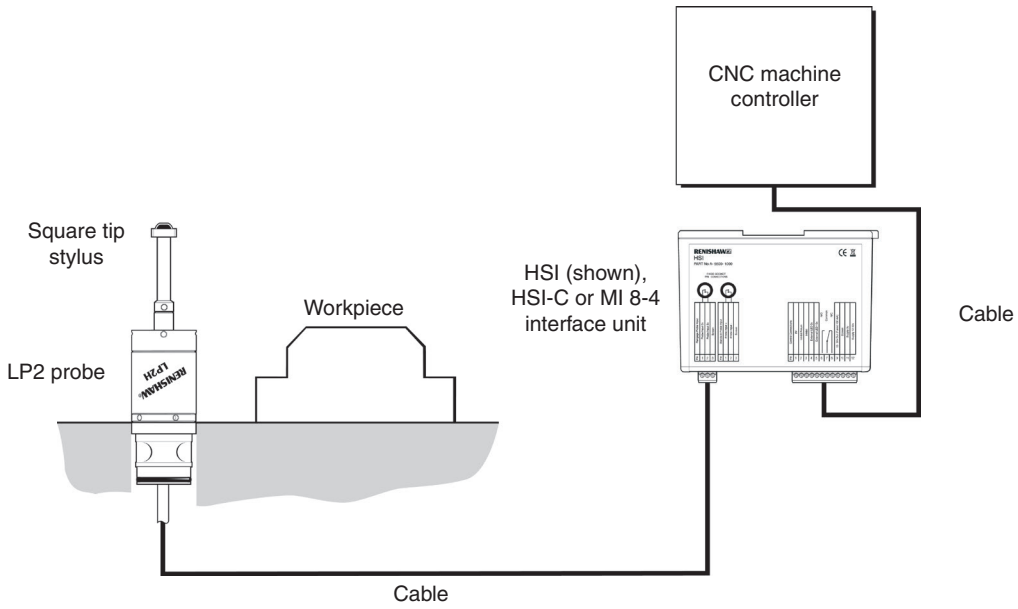

Lathes (radio transmission)

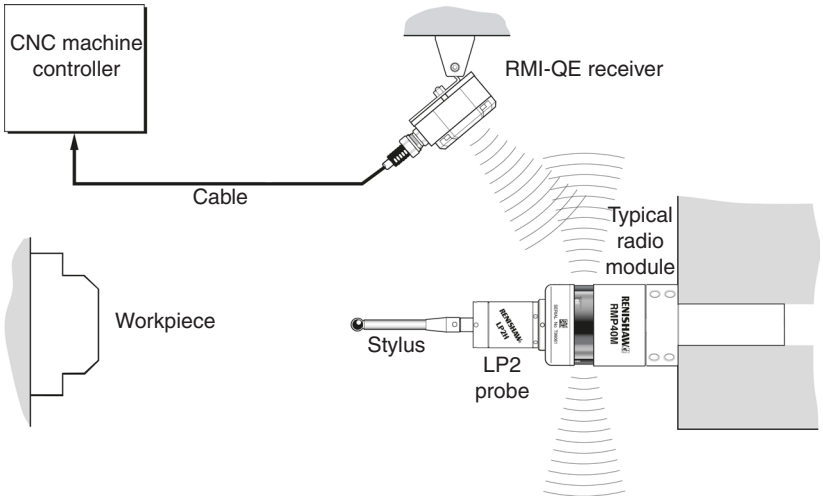

Lathes (optical transmission)

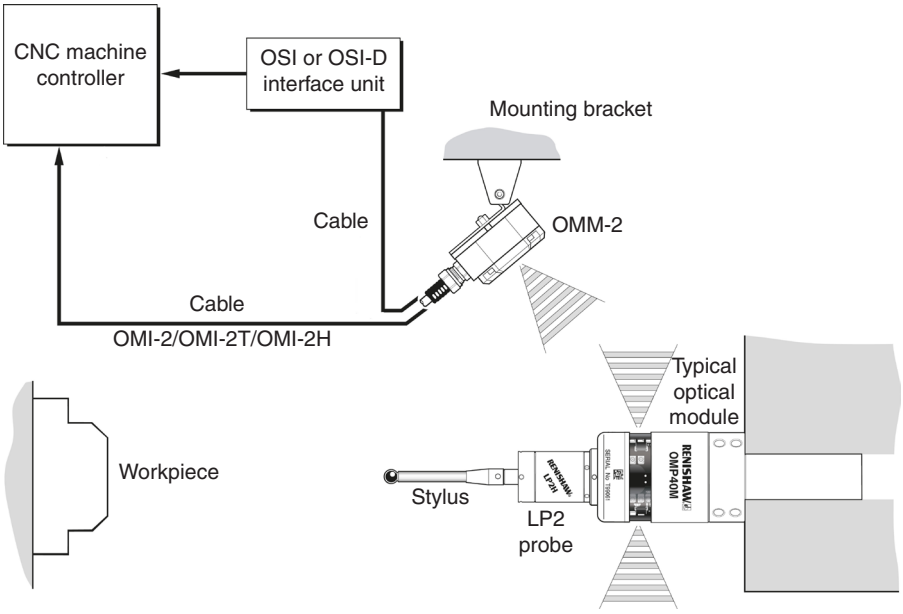

Lathes (hard-wired transmission)

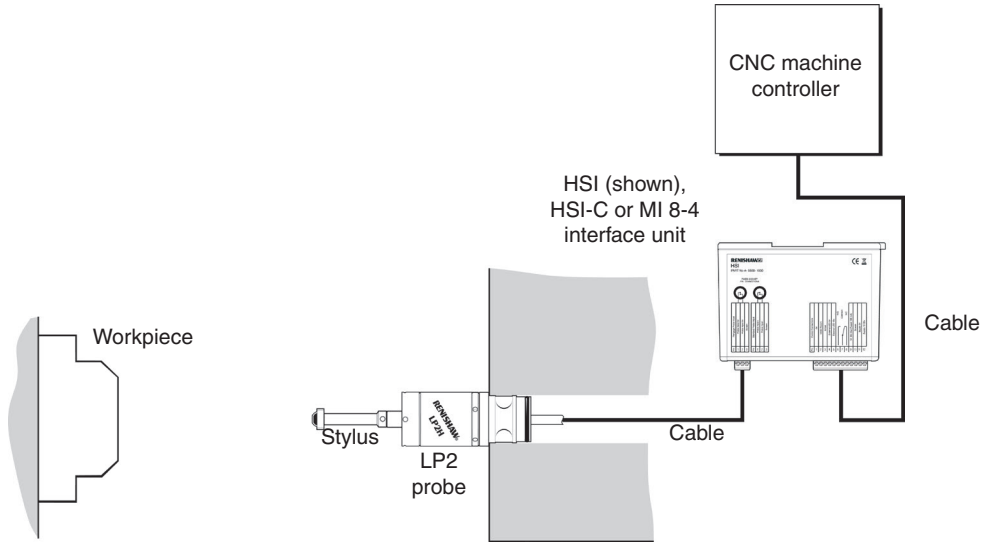

Recommended connection diagram for LP2 with HSI-C interface

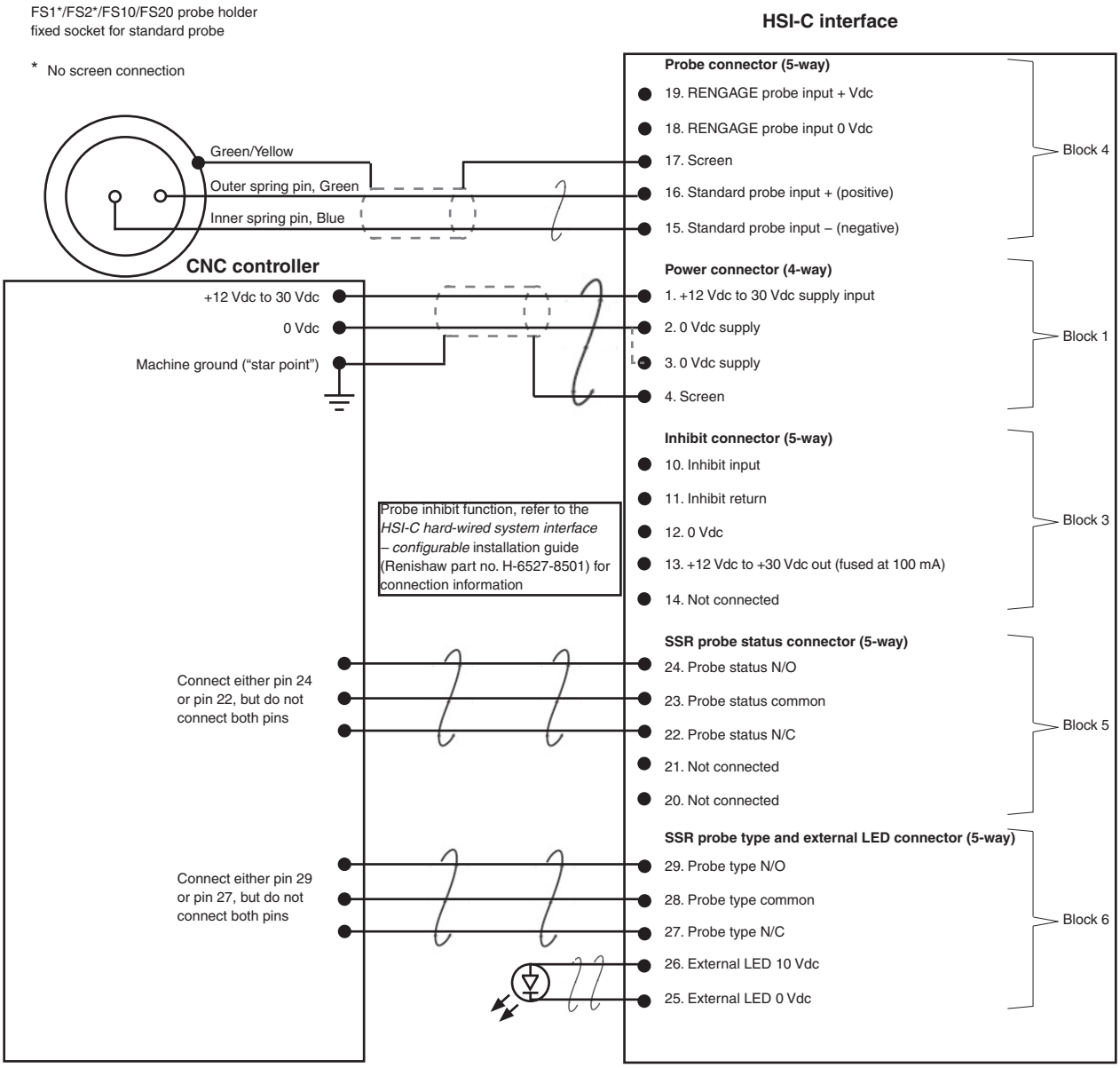

Probe status	Normally open (N/O)	Normally closed (N/C)
Probe triggered	Closed	Open
Probe seated	Open	Closed

NOTE:

When the SSR output is connected as normally open (NO), the LP2 probe will remain in the non-triggered (seated) state if the power supply is interrupted or if the probe is damaged.

When connecting the LP2 probe to the HSI-C interface, use the connection labelled STANDARD PROBE.

Recommended connection diagram for LP2 with HSI interface

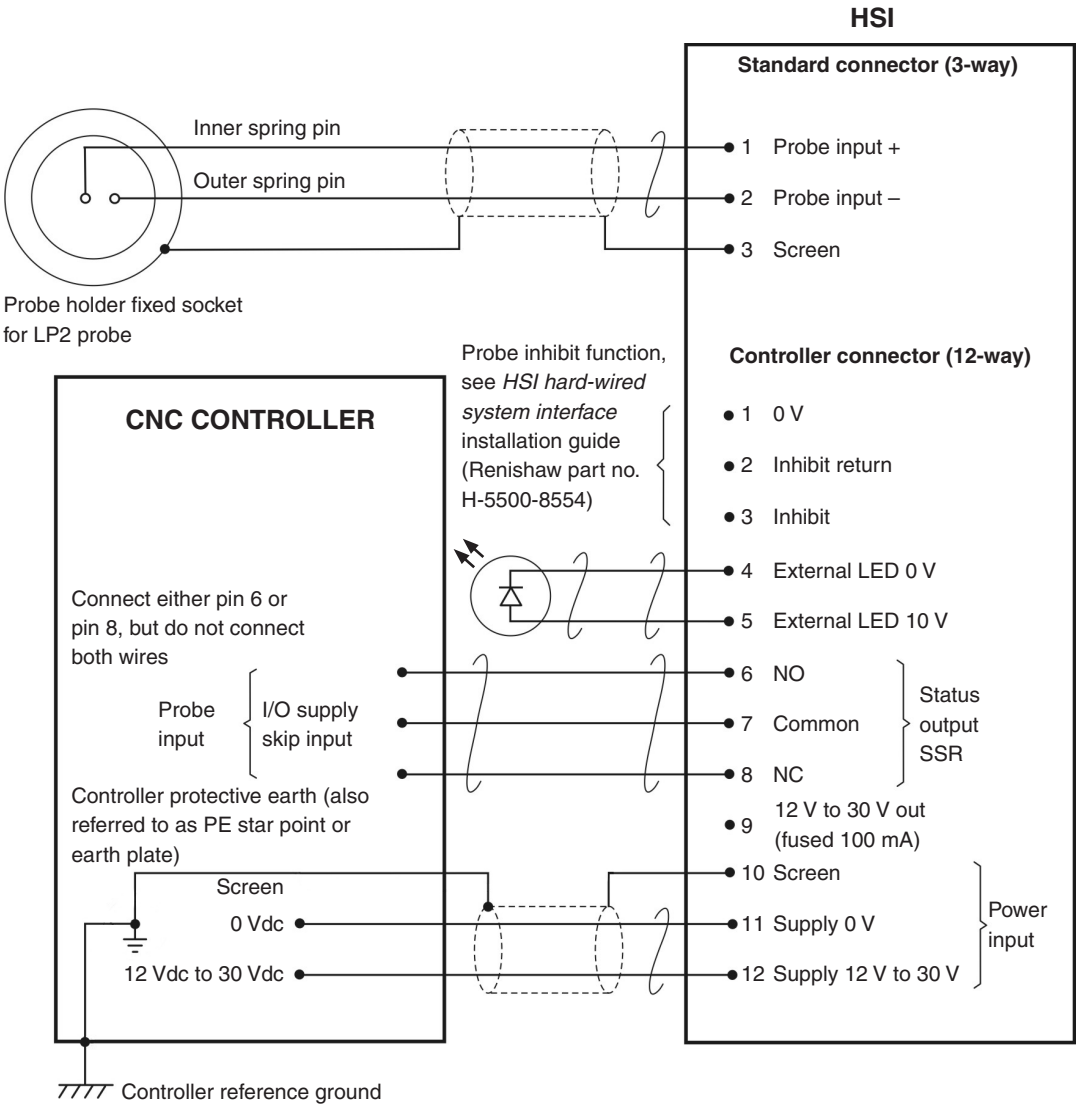

Probe status	*Normally open (NO)	**Normally closed (NC)
Probe triggered	Closed	Open
Probe seated	Open	Closed

NOTE:

When the SSR output is connected as normally open (NO), the LP2 probe will remain in the non-triggered (seated) state if the power supply is interrupted or if the probe is damaged.

When connecting the LP2 probe to the HSI interface, use the connection labelled STANDARD PROBE.

Recommended connection diagram for LP2 with MI 8-4 interface

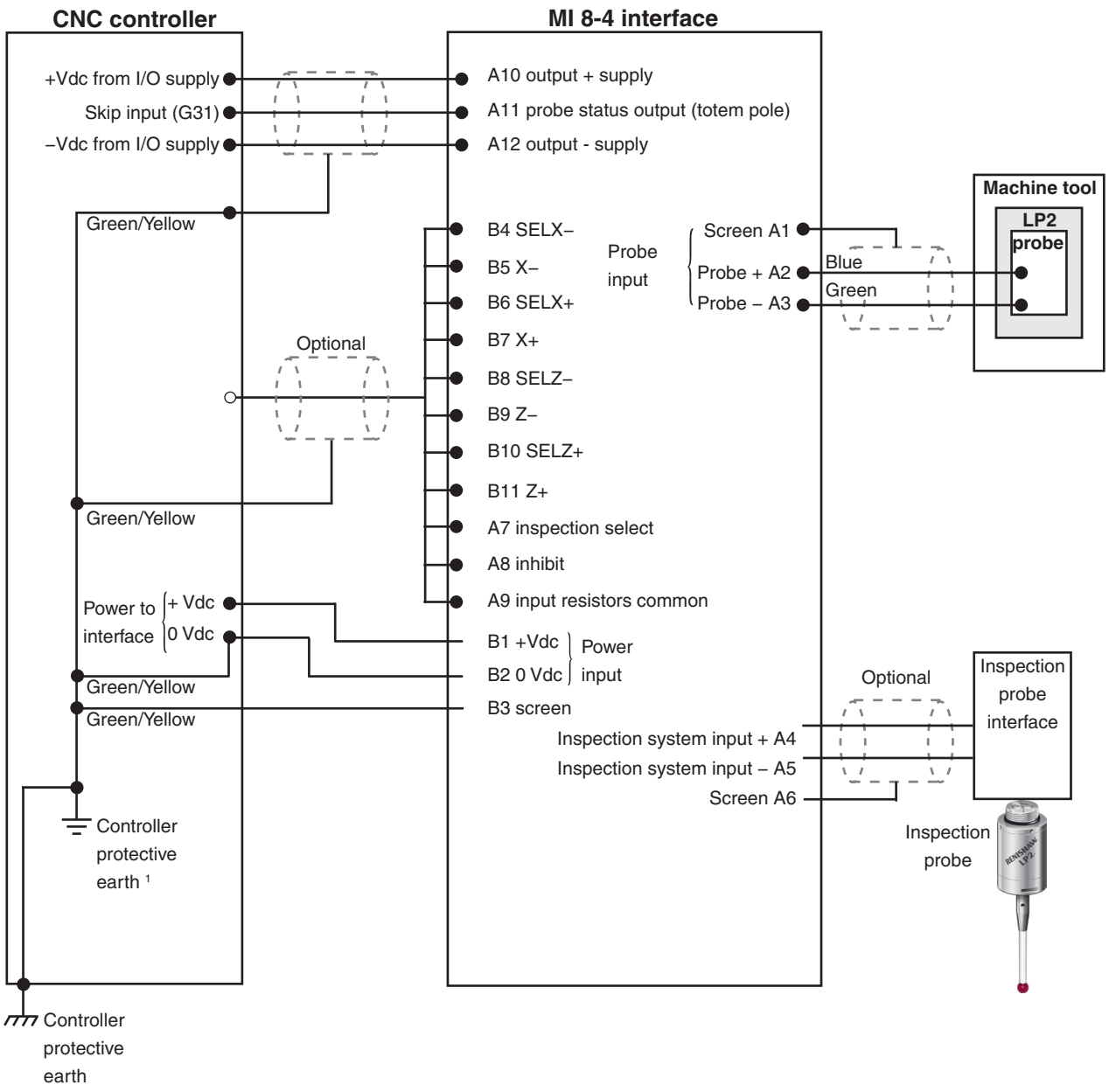

1 Can also be referred to as 'PE starpoint' or 'earthplate'

NOTE: For more information regarding these connections, see the *MI 8-4 interface unit* installation and user's guide (Renishaw part no. H-2000-5008).

Stylus spring force adjustment

NOTE: LP2 and LP2DD are adjustable, LP2H and LP2HDD are not adjustable.

Stylus trigger force is determined by the internal spring force set by Renishaw. The user should only adjust the spring force in special circumstances, for example, when excessive machine vibration causes faulty readings or there is insufficient force to support the stylus weight.

Low force improves probe sensitivity. To lower the force, turn the key anti-clockwise as far as required: it will eventually come to a stop.

To increase the force, turn the key clockwise. Take care, as the internal screw will eventually become disengaged. In the event of this happening, remove any force on the stylus and turn the key anti-clockwise to re-engage the thread. If this is unsuccessful, return the probe to your supplier for repair.

CAUTION: Stylus spring force adjustment and use of styli other than a calibration stylus type, may cause probe repeatability to differ from the calibration certificate results.

Factory setting

LP2

XY low force	0.50 N, 51 gf (1.80 ozf)
XY high force	0.90 N, 92 gf (3.24 ozf)
+Z	5.85 N, 597 gf (21.04 ozf)

Maximum setting

XY low force	1.00 N, 102 gf (3.59 ozf)
XY high force	1.85 N, 188 gf (6.65 ozf)
+Z	7.40 N, 754 gf (26.61 ozf)

Minimum setting

XY low force	0.25 N, 25 gf (0.90 ozf)
XY high force	0.50 N, 51 gf (1.80 ozf)
+Z	2.35 N, 239 gf (8.45 ozf)

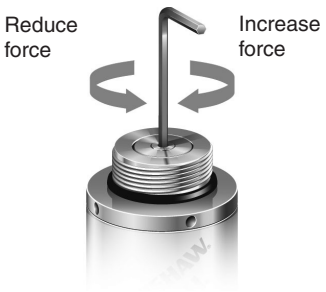

Stylus on-centre adjustment with probe holders and sockets

Stylus on-centre adjustment

Stylus position is established using a setting gauge or dial test indicator.

Lathes – inspection

The stylus is set to the same height as the spindle centre line to avoid errors when gauging diameters. The stylus tip position should correspond to the normal tool tip position for efficient programming.

1. MA4 90° adaptor
   The probe is set through 360°.

2. FS3 adjustable holder
   The holder pivots on two Ø6 mm balls. Two opposing screws permit ±4° fine rotational adjustment.

Lathes and machining centres

3. Tool setting
   The square tip of the stylus must align exactly with the machine's X and Y axes (machining centres) and X axis (lathes). Coarse alignment is obtained by adjusting the stylus tip. The optional FS1 socket provides ±4° fine rotational adjustment.

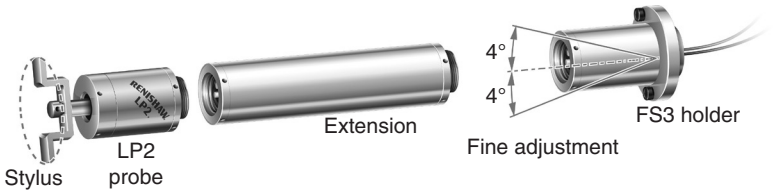

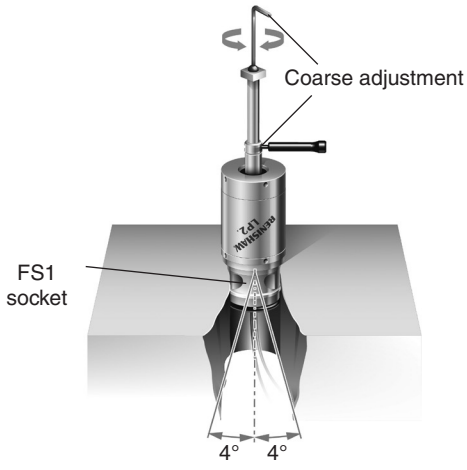

Stylus on-centre adjustment with shank adaptor or shank

1. **Shank adaptor only –** fit shank adaptor onto shank and tighten the shank screws.
2. Attach the MA2 to the shank or shank adaptor. Tighten the two MA2 holding screws, then unscrew half a turn.
3. Centralise the two MA2 screws at midposition in the MA2 slots.
4. Fit the four on-centre adjusting screws loosely.
5. Insert the probe unit into the machine spindle.
6. Position the dial test indicator (DTI) against the stylus, with light pressure so as not to deflect the stylus.
7. Connect the curly cable to the MA2 and interface.
8. Switch the power on to monitor any accidental probe trigger during adjustment.
9. Engage the machine spindle in a neutral or high gear for easy manual rotation. Check the DTI during spindle rotation. Adjust the four adjusting screws one at a time. Following each adjustment, unscrew the active screw clear of the centre shaft. Repeat until the stylus is on-centre. Finally, tighten the two MA2 holding screws and four on-centre adjusting screws.

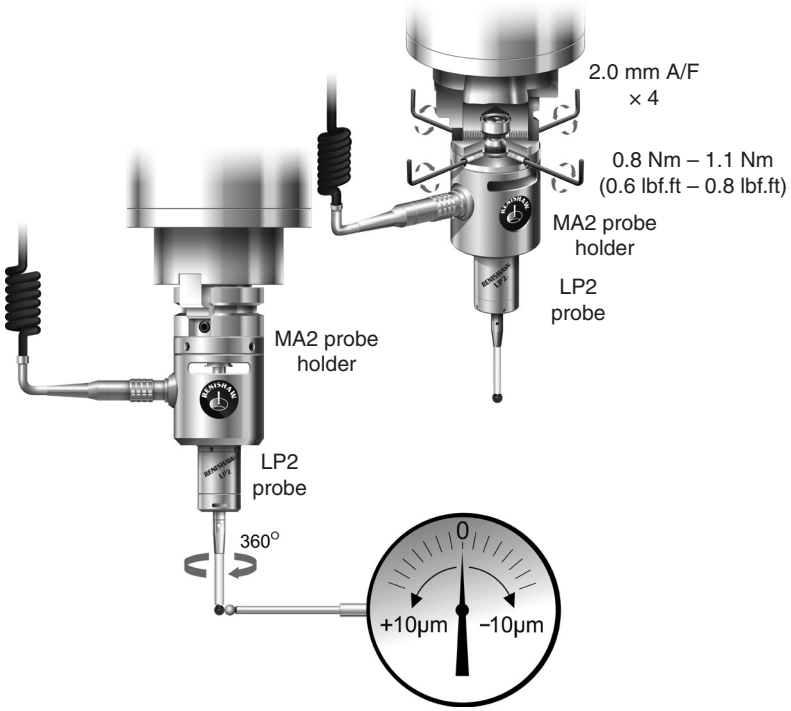

Screw torque values Nm (lbf. ft)

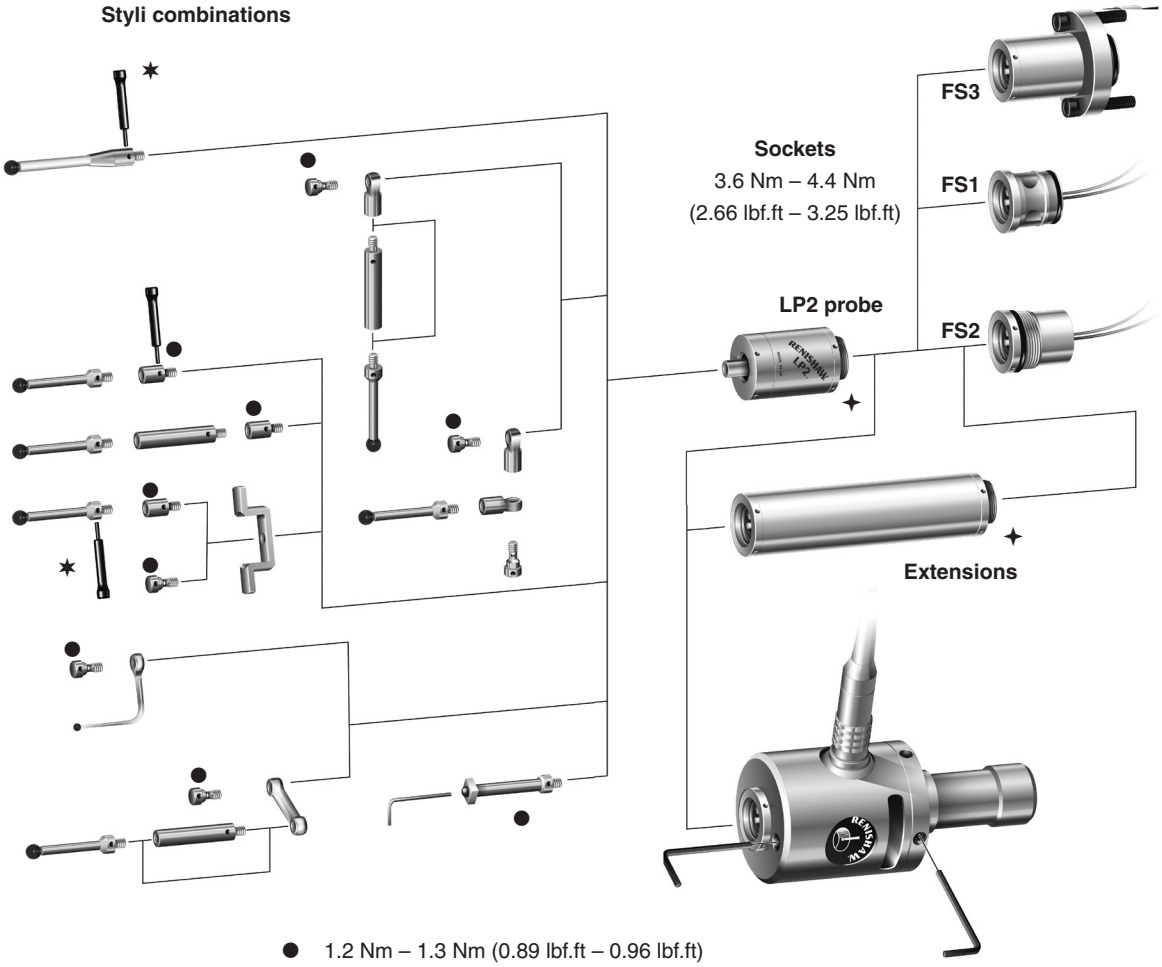

- ● 1.2 Nm – 1.3 Nm (0.89 lbf.ft – 0.96 lbf.ft)
- ✶ 1.8 Nm – 2.2 Nm (1.33 lbf.ft – 1.62 lbf.ft)
- ✦ **M16 thread**
  10.0 Nm – 12.0 Nm (7.38 lbf.ft – 8.85 lbf.ft) (normal)
  20.0 Nm (14.75 lbf.ft) (maximum)

NOTE: For stylus recommendations, see the *Styli and accessories* technical specifications (Renishaw part no. H-1000-3200).

Calibrating the LP2

Why calibrate a probe?

A spindle probe is just one component of the measurement system which communicates with the machine tool. Each part of the system can introduce a constant difference between the position that the stylus touches and the position that is reported to the machine. If the probe is not calibrated, this difference will appear as an inaccuracy in the measurement. Calibration of the probe allows the probing software to compensate for this difference.

During normal use, the difference between the touch position and the reported position does not change, but it is important that the probe is calibrated in the following circumstances:

- when a probe system is to be used for the first time;
- when the LP2 operating configuration is changed;
- when a new stylus is fitted to the probe;
- when it is suspected that the stylus has become distorted or that the probe has been crashed;
- at regular intervals to compensate for mechanical changes of your machine tool;
- if repeatability of relocation of the probe shank is poor. In this case, the probe may need to be recalibrated each time it is selected.

Three different operations are to be used when calibrating a probe. They are:

- calibrating either in a bored hole or on a turned diameter of known position;
- calibrating either in a ring gauge or on a datum sphere;
- calibrating the probe length.

Calibrating in a bored hole or on a turned diameter

Calibrating a probe, either in a bored hole or on a turned diameter of known size, automatically stores values for the offset of the stylus ball to the spindle centre line. The stored values are then used automatically in the measuring cycles. Measured values are compensated by these values so that they are relative to the true spindle centre line.

Calibrating in a ring gauge or on a datum sphere

Calibrating a probe either in a ring gauge or on a datum sphere with a known diameter automatically stores one or more values for the radius of the stylus ball. The stored values are then used automatically by the measuring cycles to give the true size of the feature. The values are also used to give true positions of single surface features.

NOTE: The stored radius values are based on the true electronic trigger points. These values are different from the physical sizes.

Calibrating the probe length

Calibrating a probe on a known reference surface determines the length of the probe, based on the electronic trigger point. The stored value for length is different from the physical length of the probe assembly. Additionally, the operation can automatically compensate for machine and fixture height errors by adjusting the probe length value that is stored.

Calibration feedrate and rotary axes

It is very important that the probe calibration is carried out at the same speed as the measurement speed, as this automatically compensates for the fixed time difference between the stylus touching the part and the machine control reading the scale position.

If a rotary axis on the machine rotates the workpiece into the stylus then different diameter workpieces will touch the stylus at different linear speeds. The measurement speed is therefore likely to be different from the calibration speed and compensation will have to be carried out to account for the different speeds.

Software requirements

Software for turning and machining centres

Good software will do the following:

- Offer simple to use calibration routines.
- Update a tool offset.
- Generate an alarm if a broken tool is found or set a flag for corrective action.
- Update work co-ordinate systems for positioning.
- Report measured sizes and update tool offsets for automatic tool offset compensations.
- Print data in the form of an inspection report to an external PC/printer.
- Set tolerances on features.

NOTE: Probe cycles and features are machine software dependent. Software for probing routines is available from Renishaw.

Verify your software

1. Does your software have suitable calibration routines which compensate for stylus on-centre errors? If not, you must set the probe stylus on-centre mechanically.

   NOTE: machining centre applications:

   When using probe styli which are not on spindle centre, spindle orientation repeatability is important to avoid probe measurement errors.

2. Does your software compensate for probe triggering characteristics in all measuring directions?
3. Does the software automatically adjust the program co-ordinate system to the relevant set-up feature on the component, for job set-up purposes?

Maintenance

Service

You may undertake the maintenance routines described in these instructions.

Further dismantling and repair of Renishaw equipment is a highly specialised operation, which must be carried out at an authorised Renishaw Service Centre.

Equipment requiring repair, overhaul or attention under warranty should be returned to your supplier.

WARNING: Before carrying out any maintenance operations, ensure that the machine is safe to work on and electrical power to the interface unit is switched off.

Maintenance

CAUTION: The probe is a precision tool and must be handled with care. The probe is designed to operate in a machine tool environment. Do not allow chips to build up around the probe body, and do not allow dirt or liquids to enter the sealed working parts. Keep system mating surfaces clean. Periodically check the probe's rear O-ring, cables and connections for signs of damage and slackness.

Cleaning the probe front seal

LP2 – LP2H

Dirt may accumulate in the cavity underneath the metal eyelid seal.

LP2DD – LP2HDD

Dirt may accumulate in the cavity underneath the outer diaphragm. (Outer diaphragm replacement kits are available.)

LP2 – LP2H – LP2DD – LP2HDD

Once a month, remove the stylus front cap (the C spanner is provided for easy cap removal) then remove all the residue with a low-pressure jet of coolant. Do not use a sharp tool or a degreasing agent. The cleaning interval may be extended or reduced, depending on the rate at which dirt accumulates. If the inner diaphragm is damaged, return the probe to your supplier for repair.

CAUTION: Do not use the probe with the cap removed. Check that the probe is firmly secured in its mounting.

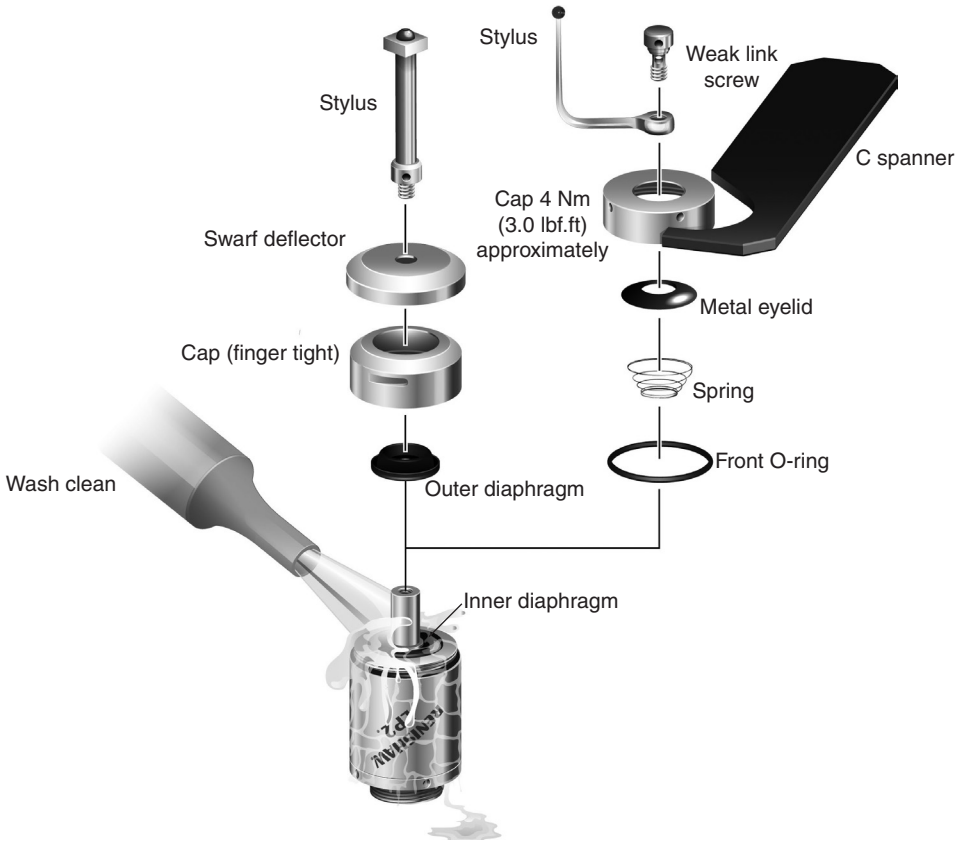

Fault-finding

Symptom	Cause	Action
Complete failure.	Transmission modules not correctly aligned.	Align correctly.
	Transmission modules damaged.	Return to supplier for repair. For information on transmission, refer to the relevant installation guide.
	Loose mounting.	Check all bolted or screwed connections for tightness.
	Interface LED does not light up.	Check fuses.
	Poor electrical connection.	Check connectors.
	Cable screen broken.	Replace cable.
	Incorrect voltage.	Check supply.
	Probe failure.	No continuity through probe circuit.
	Probe spring force too low.	Tighten stylus spring force.
	Probe mounting damaged.	Repair or replace.
Poor repeatability.	Transmission modules not correctly aligned.	Align correctly.
	Loose mounting.	Check all bolts and screwed connections for tightness.
	Loose stylus.	Tighten.
	Poor electrical connections.	Check connectors.
	Excessive machine vibration.	Tighten spring force.
Spurious reading.	Cable screen broken.	Replace.
	Poorly regulated supply voltage.	Regulate correctly.
	Excessive machine vibration.	Eliminate vibration or adjust stylus spring force.
Poor re-arming (the probe is armed when the stylus mounting is seated, the electrical circuit is complete and the interface LED is lit).	Spring force too low.	Adjust spring force.
	Inner diaphragm pierced or damaged.	Return to supplier for repair.

This page is intentionally left blank

Parts list

Item	Part number	Description
LP2	A-2063-6098	LP2 probe complete with two C spanners and TK1 tools.
LP2H	A-2064-0002	LP2H probe complete with two C spanners and TK1 tools.
MA2 probe holder	A-2063-7868	MA2 probe holder, complete with holding screws.
Adaptor	M-2063-7865	Shank adaptor for MA2 probe holder, complete with holding screws.
Cable	A-1016-6451	Cable assembly for MA2 probe holder.
Service kit	A-2063-7542	LP2 service kit comprises: front cover, eyelid seal, spring and O-rings.
LP2DD	A-2063-8020	LP2DD probe complete with two C spanners and probe head tools.
LP2HDD	A-2064-0032	LP2HDD probe complete with two C spanners and probe head tools.
Deflector	M-2063-8003	Swarf deflector, Ø28 mm, protects probe from hot swarf.
Diaphragm kit	A-2063-8030	Outer diaphragm and O ring replacement kit.
Conversion kit	A-2063-8023	The kit converts LP2 and LP2H probes to the DD standard, comprising : front ring, outer diaphragm, O ring, two C spanners.
PS3-1C	A-5000-3709	Ceramic stylus 50 mm long with Ø6 mm ball.
PS2-41	A-5000-6403	Square tool setting stylus.
Protection	M-5000-7582	Stylus adaptor with weak link collision protection for straight steel styli.
Protection	M-5000-7587	Screw with weak link collision protection for straight steel styli.
Protection	M-5000-7588	Screw with weak link collision protection for swivel adaptor.
TK1	A-2053-7531	Probe head tool kit.
C-spanner	A-2063-7641	C-spanner.
MI 8-4 interface	A-2157-0001	MI 8-4 interface unit with dual lock pads and DIN rail mounting, installation and user's guide and packaging.
HSI interface	A-5500-1000	HSI probe system interface with DIN rail mounting and three terminal blocks, quick-start guide and packaging.
HSI-C interface	A-6527-1000	HSI-C probe system interface, quick-start guide and packaging.
Terminal block (HSI-C only)	P-CN47-0082	4-way terminal block (1 off required).
Terminal block (HSI-C only)	P-CN47-0083	5-way terminal block (5 off required).

Item	Part number	Description
Publications. These can be downloaded from our website at **www.renishaw.com**.		
MI 8-4	H-2000-5008	Installation guide: for set-up of the MI 8-4 interface unit.
HSI	H-5500-8554	Installation guide: for set-up of the HSI interface unit.
HSI-C	H-6527-8501	Installation guide: for set-up of the HSI-C interface unit.
ACS-1	H-6974-8501	Installation guide: for set-up of the ACS-1.
Fixed sockets and extension bars	H-2000-2073	Installation guide: for set-up and use of fixed sockets and extension bars.
Styli	H-1000-3200	Technical specifications: Styli and accessories – or visit our Online store at **www.renishaw.com/shop**.
Probe software	H-2000-2298	Data sheet: Probe software for machine tools – programs and features.

RENISHAW
apply innovation™

www.renishaw.com/contact

#renishaw

+44 (0) 1453 524524 uk@renishaw.com

© 1989–2026 Renishaw plc. All rights reserved. This document may not be copied or reproduced in whole or in part, or transferred to any other media or language by any means, without the prior written permission of Renishaw.
RENISHAW® and the probe symbol are registered trade marks of Renishaw plc. Renishaw product names, designations and the mark 'apply innovation' are trade marks of Renishaw plc or its subsidiaries. Other brand, product or company names are trade marks of their respective owners.
WHILE CONSIDERABLE EFFORT WAS MADE TO VERIFY THE ACCURACY OF THIS DOCUMENT AT PUBLICATION, ALL WARRANTIES, CONDITIONS, REPRESENTATIONS AND LIABILITY, HOWSOEVER ARISING, ARE EXCLUDED TO THE EXTENT PERMITTED BY LAW.
RENISHAW RESERVES THE RIGHT TO MAKE CHANGES TO THIS DOCUMENT AND TO THE EQUIPMENT, AND/OR SOFTWARE AND THE SPECIFICATION DESCRIBED HEREIN WITHOUT OBLIGATION TO PROVIDE NOTICE OF SUCH CHANGES.
Renishaw plc. Registered in England and Wales. Company no: 1106260. Registered office: New Mills, Wotton-under-Edge, Glos, GL12 8JR, UK.

Part no.: H-2000-5021-09-A
Issued: 11.2026