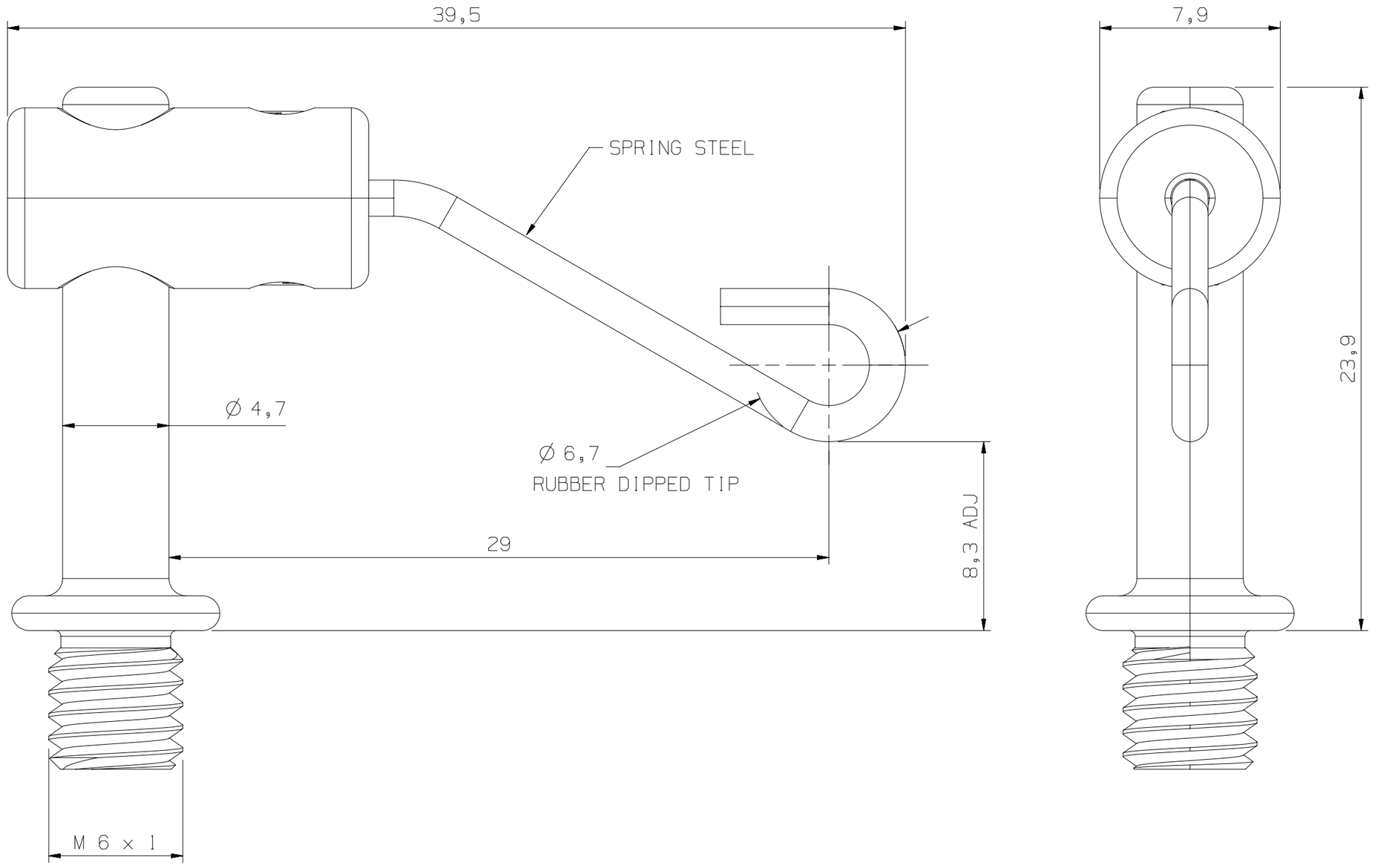

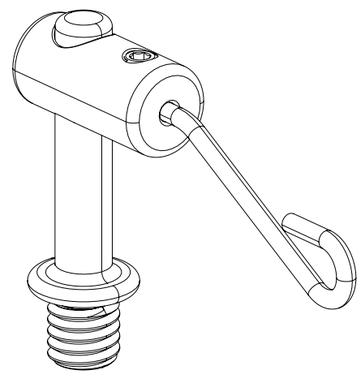

SCALE 2:1

TO ORDER PLEASE QUOTE PART NUMBER R-CWT-25-25-6

THIS IS A CUSTOMER DRAWING. DIMENSIONS ARE GENERALLY NOMINAL EXCEPT WHERE TOLERANCED.

TOLERANCED DIMENSIONS ARE CONSIDERED CRITICAL AND ARE INSPECTED BY OUR QUALITY DEPARTMENT PRIOR TO DESPATCH.

ALL DIMENSIONS ARE IN MILLIMETRES.
DRAWING PRACTICE TO BS 8888.

3rd ANGLE PROJECTION

DO NOT SCALE

TITLE	ISSUE No.	DRAWN BY	DRAWN DATE
M6 S/T SPRG/W CLMP L8.3X29	-	PE	FWB 17
MATERIAL TYPE CODE	MATERIAL	SHEET	CHECKED
	ANODISED ALUMINIUM	1 OF 1	-

CONFIDENTIAL. THIS DRAWING IS THE PROPERTY OF © RENISHAW plc, AND MAY NOT BE COPIED OR USED FOR ANY PURPOSE, OTHER THAN THAT FOR WHICH IT IS SUPPLIED, WITHOUT THE EXPRESS WRITTEN AUTHORITY OF RENISHAW plc.

RENISHAW®

Wotton - under - Edge
Glos. England.
GL12 8JR

SCALE U.O.S. 5:1

DRAWING No. N-R-CWT-25-25-6-A